2014 PARTS CATALOG

TOHATSU

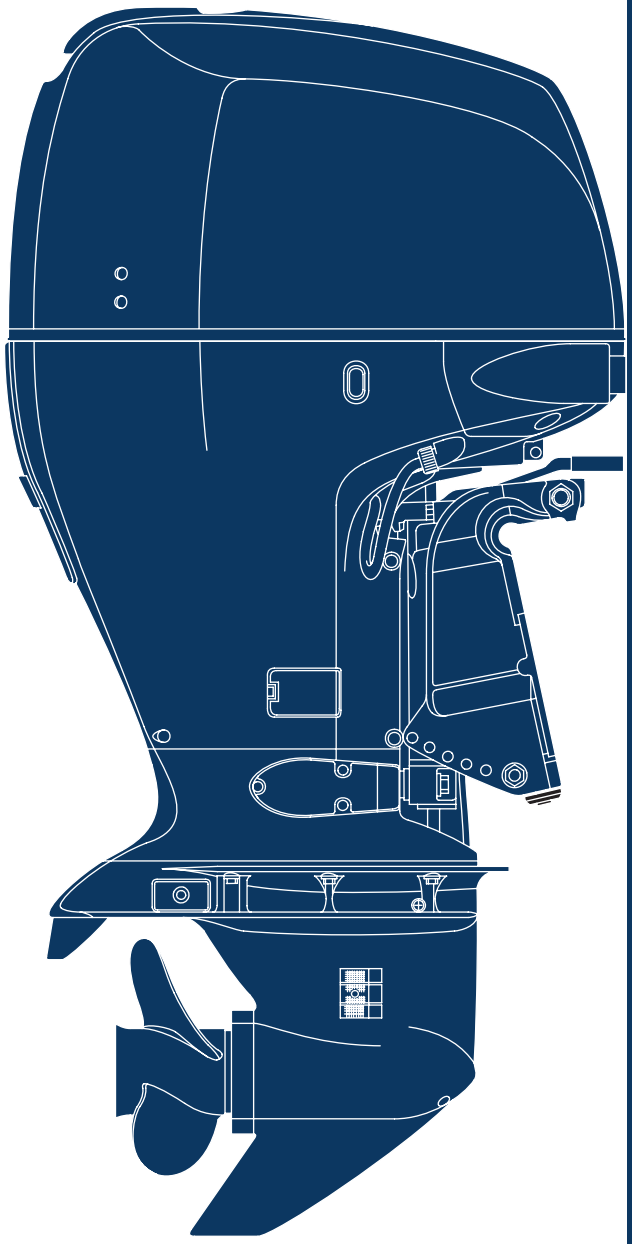

BFT 115A

OB NO.002-13ZX1-0
1311EU/EX

Instruction for use of parts catalogue

- **This parts catalogue was prepared based on the latest information available as of December 1, 2013.**

- See the Service Bulletin for any revision that is made after December 1, 2013.

- **Always specify the part number when ordering a part.**
  - Check the model, type, serial numbers, color, maker, and the size as needed before ordering a part.
  - Note that the illustrations (part drawings) can differ from the actual parts in shape.
    Illustrations are given just to help you to refer to the parts.

- **When modifications or additions to this parts catalogue are made, a revised edition will be issued at an appropriate time, with successively progressing revision numbers on the cover. We recommend obtaining such revisions in order to keep your parts catalogue up-to-date at all times.**

Initial version issue date December 1, 2013

CONTENTS

E-1	CYLINDER HEAD COVER	1
E-3	CYLINDER BLOCK	3
E-4	EXHAUST PIPE	7
E-4-10	WATER HOSE	9
E-5	OIL PUMP/FLYWHEEL	11
E-6	OIL PAN	13
E-7	CRANKSHAFT/PISTON	15
E-9	CAMSHAFT/VALVE	19
E-9-10	CHAIN CASE/THARMOSTAT	23
E-9-20	CYLINDER HEAD	25
E-10	BALANCER SHAFT	29
E-13	A.C.G BELT/SILENCER DUCT	31
E-14	INTAKE MANIFOLD/INJECTOR	33
E-15	THROTTLE BODY	37
E-18	FUEL PUMP/FUEL HOSE	39
E-18-1	WATER SEPARATOR	43
E-18-10	VAPOR SEPARATOR ASSY	45
E-19	A.C.GENERATOR	49
E-20	IGNITION COIL/SPARK PLUG	53
E-20-10	ELECTRONIC CONTROL UNIT	55
E-21	STARTER MOTOR	57
F-2	SHIFT SHAFT	59
F-3	GEAR CASE	63
F-3-10	GEAR CASE ASSY	65
F-3-20	EXTENSION CASE	67
F-4	WATER PUMP/VERTICAL SHAFT	69
F-5	PROPELLER SHAFT/PROPELLER (LD/LU/XU)	73
F-6	FUEL TUBE	77
F-7	WIRE HARNESS	79
F-7-10	STARTER CABLE	81
F-7-20	FUSE BOX/RELAY	83
F-7-30	CLAMP	85
F-8	ENGINE COVER ASSY	87
F-8-10	FR.COVER BRACKET/FR.LOCK	89
F-8-20	UNDER COVER	91
F-9	MOUNT CASE	93
F-10	STERN BRACKET/SWIVEL CASE	97
F-11	POWER TRIM-TILT	103
F-12	LABELS	107
F-13	TOOLS	109
FOP-1	RIGGGING HOSE KIT	111
FOP-2	METER	113
FOP-6	CONTROL PANEL (1)	115
FOP-6-1	CONTROL PANEL (2)	117
FOP-7	TRIM ADJUST PLATE SET	119
FOP-8	REMOTE CONTROL (TOP MOUNT SINGLE TYPE) (RIGHT)	121
FOP-8-2	REMOTE CONTROL (TOP MOUNT DUAL TYPE) (RIGHT)	125
FOP-8-4	REMOTE CONTROL (FLUSH MOUNT TYPE) (RIGHT)	129
FOP-8-6	REMOTE CONTROL	131
FOP-9	BOLT KIT	137
FOP-10	WATER PUMP IMPELLER KIT (1)	139
FOP-10-1	WATER PUMP IMPELLER KIT (2)	141
FOP-11	INTERFACE CABLE KIT	143
FOP-12	TROLLING CONTROL SWITCH	145
FOP-13	SPEED SENSOR TUBE KIT	147
INDEX		149
INDEX (Parts Number)		155

How to refer to the part information

A. Reference with “Illustrated index”

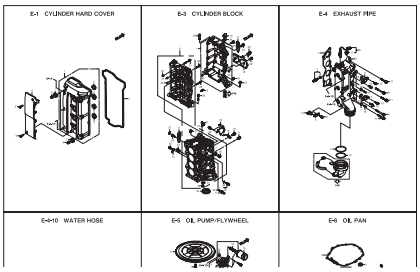

Fig. Number

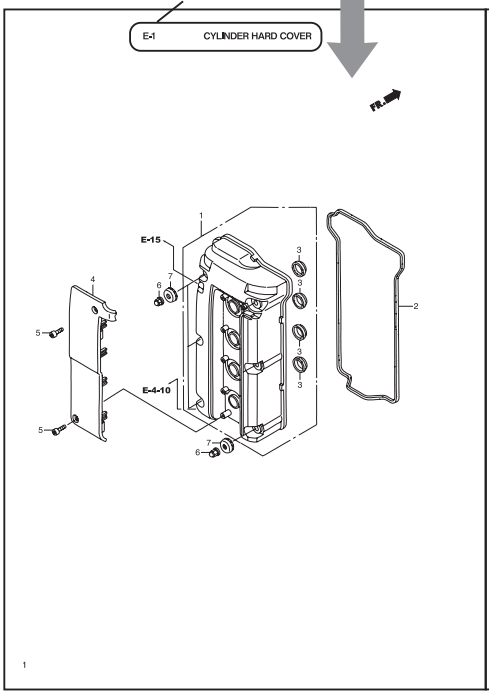

Ref. Number/Part Number/Parts Name

Ref.No.		Part No.	Description	Q'ty BFT115A	Remarks
E-1	1	HZY6-12310-0102A	COVER COMP, CYLINDER HEAD	1	*NH8* DARK GRAY
E-1	2	HPNA-12341-000	PACKING, CYLINDER HEAD COVER	1	
E-1	3	HPCX-12342-004	SEAL, SPARK PLUG TUBE(NOK)	4	
E-1	4	HZY6-12900-000	COVER COMP, PLUG HOLE COIL	1	
E-1	5	HZY2-90084-000	BOLT, SOCKET, 8X25	2	
E-1	6	HZY6-90201-000	NUT, FLANGE CAP, 6MM	6	
E-1	7	HZY6-90401-000	WASHER, HEAD COVER	6	

1

2

B. Reference with “Parts number index”

INDEX (Parts Number)

1H2-11534-0 13-15
309-00012-0 6-7
309-00017-0 5-20
309-00097-0 8-13
309-00097-2 6-17
309-00097-3 9-36
309-00303-2 5-12
332-00005-2 9-30
332-00005-2 ..... 11A-3
332-00006-0 9-37
332-00006-0 ..... 11A-4
332-00006-0 28-5-2
332-00103-0 ..... 11B-6
332-00103-0 28-4-3
332-02101-1 13-96
332-02101-1 13-97
332-06322-0 ..... 11B-16
332-06932-0 ..... 11A-16
332-06932-0 28-5-3
332-06932-0 ..... 11A-33
332-06932-0 28-5-7
332-70320-0 20-11
332D02102-1 13-98
334-00313-0 8-3
334-00313-0 ..... 11A-24
336-00973-0 13-23
336-00977-0 ..... 13-14+12
336-00007-0 23-47
346-04083-0 ..... 11A-28-3
346-04084-0 ..... 11A-28-4
346-04412-1 ..... 11B-23
346-04412-3 ..... 11B-24
346-04421-0 ..... 11B-21
346-04218-0 ..... 11B-13
346-04219-0 ..... 11B-18
346-04231-0 ..... 11B-23
346-04302-0 ..... 11A-13-2
346-04303-0 ..... 11A-13-3
346-04303-3 24-7-6
346-04327-0 ..... 11A-11
346-04328-0 ..... 11A-12
346-05001-0 ..... 11A-21
346-05013-0 24-4-4
346-05017-0 ..... 11A-20
346-06037-0 ..... 11A-17
346-06037-0 ..... 24A-7-10
346-06321-0 12-70
346-06322-0 12-68
346-06323-0 12-81
346-06331-0 12-83-2
346-06334-0 12-22
346-06334-0 12-74
346-06334-0 12-23
346-07113-0 6-21
346-07113-0 16-2
346-07114-0 6-23
346-04033-1 13-44
346-04081-1 ..... 11B-18-1
346-04083-1 ..... 11B-18-2
346-04398-0 6-75
346-04399-0 6-31
346-04399-0 9-32
346-04399-0 10-3
394-70200-0 10-13
398-06030-0 16-27
398-60097-0 9-14
398-62396-1 13-18
398-62396-1 13-3
398-70083-0 16-26
398-70083-0 24-4-10
3A0-76079-0 5-28
3A0-76079-0 7-24
3A0-76079-0 8-24
3A0-76079-0 9-43
3A1-00231-0 ..... 11A-16
3A1-00330-0 23-6
3A1-21396-1 1-37
3A1-71600-0 22-5
3A1-72191-0 22-7
3A1-76037-0 8-28-1
3A1-76037-0 9-28-2
3A1-76037-0 9-10
3A1-76088-1 22-3
3A1-76115-1 22-11

C. Reference with “Parts name index”

INDEX

<A>
ADJUST SCREW 21-28
ADJUSTING NUT 3-8
ADJUSTING SCREW 3-8
ADJUSTING SCREW 15-12
AIR FILTER 5-60
AIR VENT ASSY 6-67
ALTERNATOR ASSY 8-2
ANODE 1-14
ANODE 1A-3
ANODE 13-5
ANODE PLUG 1-12
APRON 10-28
ASSIST CORD (BLU) L=200 ..... 23-6+2
ASSIST CORD (BLU) L=200 ..... 23-6+1
ASSIST CORD (RED) L=200 23-12
ASSIST CORD (RED) L=200 ..... 23-6+3
<B>
BACK-UP RING 14-14
BALL 16-21
BALL SVB 11B-20
BALL BEARING 6205 ..... 11B-5
BALL JOINT CONNECTOR 17-22
BAND 22-17
BAND 104 8-29
BAND 104 8-30
BAND 158 6-75
BAND 158 8-31
BOLT 5-63
BOLT 5-64
BOLT 10-20
BOLT 10-24
BOLT 10-34
BOLT 10-35
BOLT 11A-6
BOLT 11A-27
BOLT 11A-35
BOLT 11A-38
BOLT 11A-39
BOLT 11B-8
BOLT 13-4
BOLT 12-13
BOLT 12-14
BOLT 12-21
BOLT 12-40
BOLT 12-48
BOLT 12-49
BOLT 12-50
BOLT 12-58
BOLT 12-63
BOLT 12-68
BOLT 13-4
BOLT 13-5
BOLT 13-19
BOLT 14-26
BOLT 14-32

Part catalogue structure

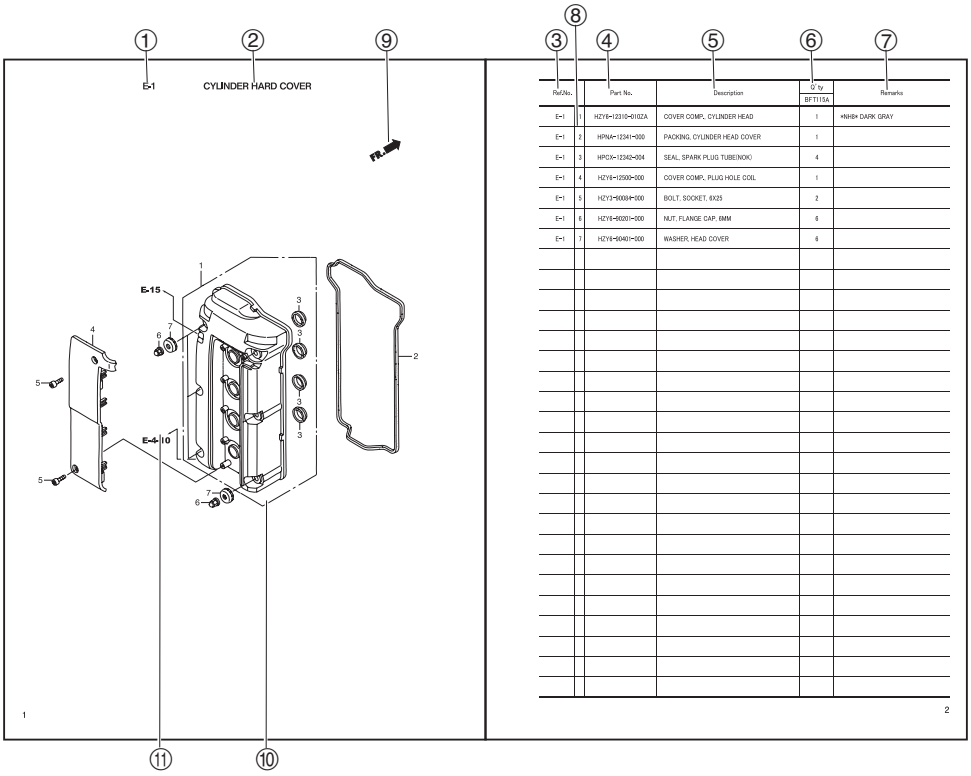

Ref.No.		Part No.	Description	Q'ty BFT115A	Remarks
E-1	1	HZY6-12310-0102A	COVER COMP., CYLINDER HEAD	1	※NH8※ DARK GRAY
E-1	2	HPNA-12341-000	PACKING, CYLINDER HEAD COVER	1	
E-1	3	HPCX-12342-004	SEAL, SPARK PLUG TUBE(NOK)	4	
E-1	4	HZY6-12500-000	COVER COMP., PLUG HOLE COIL	1	
E-1	5	HZY3-60008-000	BOLT, SOCKET, 6X25	2	
E-1	6	HZY6-60201-000	NUT, FLANGE CAP, 6MM	6	
E-1	7	HZY6-60401-000	WASHER, HEAD COVER	6	

1 2

① Fig. Number

② Fig. Title

③ Ref. Number

④ Parts Number

⑤ Parts Name

⑥ Q.ty

⑦ Remarks

⑧ Defferent specification

⑨ Direction Arrow

⑩ Parts enclosed within a doted line are sub assembly parts.

⑪ A solid arrow indicates the block No. the part in question is connected to.

How to check the part block and serial numbers

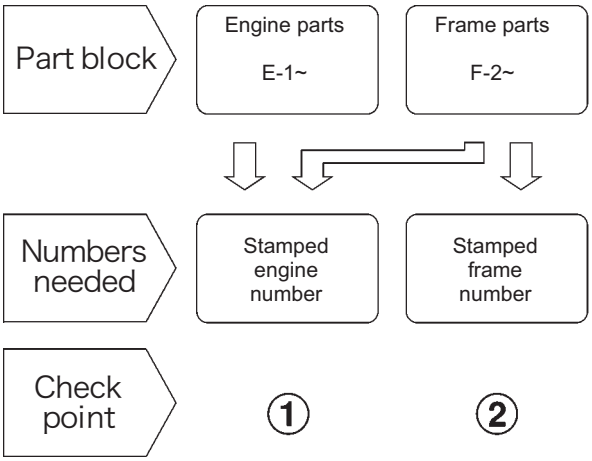

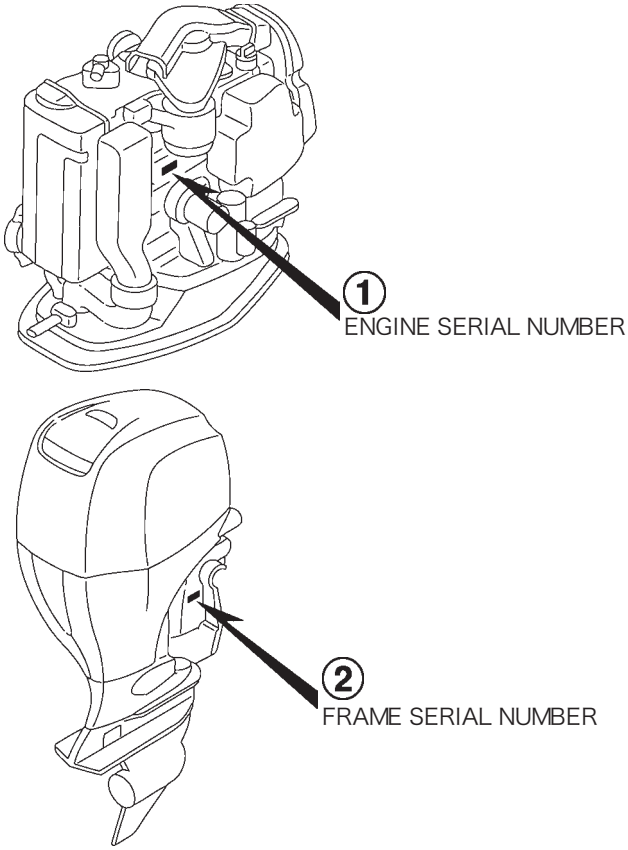

Models, parts catalogue codes and applicable serial numbers

- Models, parts catalogue codes and applicable serial Nos. given in this parts catalogue can be identified as follows.

Model	Type	Parts catalogue type	Engine		Applicable engine serial No.	Applicable frame serial No.
			Model	Type		
BFT 115A	LD	LD	BFT 115D	SE1	BEBHJ-1000001~	BBHJ-6000001~
	LU	LU				
	XU	XU				

Features of each type

- See the following table for the features of each type. (Items in brackets are optional)

Specifications \ Model	Type	BFT 115A		
		LD	LU	XU
Transom height	508 mm	●	●	
	635 mm			●
Propeller	14-1/2 x 15	(●)	(●)	(●)
	14-1/4 x 17	(●)	(●)	(●)
	14 x 19	(●)	(●)	(●)
	14 x 21	(●)	(●)	(●)
	14-1/2 x 23	(●)	(●)	(●)
	14 x 25	(●)	(●)	(●)
	15-1/2 x 13	(●)	(●)	(●)
	15-1/4 x 15	(●)	(●)	(●)
	15 x 17	(●)	(●)	(●)
	14-3/4 x 19	(●)	(●)	(●)
	14-1/2 x 21	(●)	(●)	(●)
	14-1/4 x 23	(●)	(●)	(●)

Fuel hose, general purpose hoses and vinyl hose

- The standard part fuel hose, general purpose hose and vinyl hose may be substituted by the coiled bulk part.
- When ordering the standard part fuel hose, general purpose hose and vinyl hose use the bulk part number written in the parts catalog in brackets ( ) underneath the part name.
- When exchanging the hose, cut and use at the specified length as mentioned in the part name. (For the method of cutting the bulk part, and method of filling out orders etc., please refer to the instructions issued with the bulk part.)

Bulk part number of fuel hose, general purpose hose and vinyl hose.

Example: 95001-75001-50M

Bulk part number:

Refers to the bulk part.

Marking code (fuel hose and general purpose hose)

Change code (Vinyl hose)

Indicates number mark or change sequence, however, the code for the bulk part must be strictly 0 (zero).

Types of code:

- Fuel hose
  - 2: Red outside braid (3 mm inside dia. only)
  - 5: Black inside braid
  - 3: Red (3 mm inside dia. only)
  - 4: Ash gray with red stripe (3 mm inside dia. only)
  - 6: Black
- General hose
  - 1: Ash gray
  - 2: Ash gray
  - 3: Black
  - 5: Black
- Vinyl hose
  - 1: Clear
  - 2: Black
  - 3: Light red
  - 6: Light red
  - 7: Pale black

Lengths:

001: 1 m (standard)

003: 3 m
008: 8 m } Application or specification of some parts is not settled.

I.D code: (fuel hose and general purpose hose)

30: 3.0 mm	35: 3.5 mm	45: 4.5 mm
50: 5.0 mm	55: 5.3 mm, 5.5 mm	65: 6.5 mm
70: 7.0 mm	75: 7.3 mm, 7.5 mm	80: 8.0 mm
11: 11 mm	91: 12 (outside dia. 15) mm	92: 12 (outside dia. 16) mm
12: 12 (outside dia. 17) mm	14: 14 mm	17: 17 mm

ID./OD. code: (vinyl hose)

01: ID. 2.9, OD. 6.8 mm	02: ID. 3.0, OD. 6.0 mm	03: ID. 3.5, OD. 6.5 mm
07: ID. 4.0, OD. 7.0 mm	08: ID. 4.5, OD. 6.5 mm	09: ID. 4.5, OD. 8.0 mm
12: ID. 5.0, OD. 7.0 mm	10: ID. 5.0, OD. 8.0 mm	11: ID. 5.0, OD. 9.0 mm
14: ID. 6.0, OD. 9.0 mm	17: ID. 7.0, OD. 9.0 mm	19: ID. 7.0, OD. 11.0 mm
21: ID. 8.0, OD. 9.0 mm	23: ID. 8.0, OD. 12.0 mm	25: ID. 9.0, OD. 11.0 mm
27: ID. 9.0, OD. 13.0 mm	33: ID. 10.0, OD. 14.0 mm	36: ID. 11.0, OD. 13.0 mm
37: ID. 11.0, OD. 15.0 mm	38: ID. 12.0, OD. 13.0 mm	39: ID. 12.0, OD. 14.0 mm
40: ID. 12.0, OD. 16.0 mm	43: ID. 13.0, OD. 15.0 mm	45: ID. 14.0, OD. 18.0 mm
50: ID. 16.0, OD. 19.0 mm	55: ID. 17.5, OD. 20.5 mm	60: ID. 22.0, OD. 27.0 mm

Hose type:

1: Fuel hose
3: Vinyl hose
5: General hose

CAUTION: It is DANGEROUS to confuse the fuel hose with the general purpose hose or vinyl hose.

Never use a general purpose hose or vinyl hose in place of a fuel hose or vice versa. Always use the correct bulk part in the parts catalogue, according to the service manual or the instructions issued with the bulk part.

E-1 CYLINDER HEAD COVER

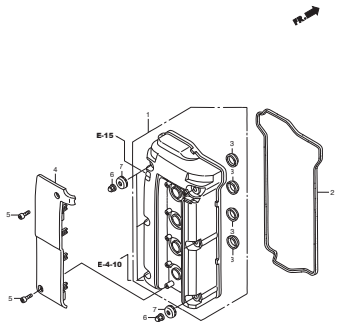

E-3 CYLINDER BLOCK

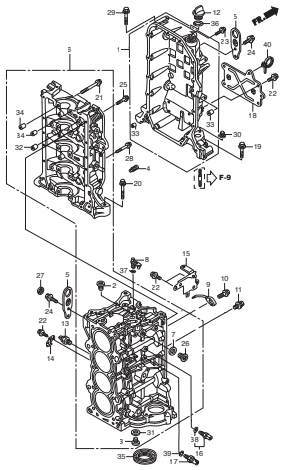

E-4 EXHAUST PIPE

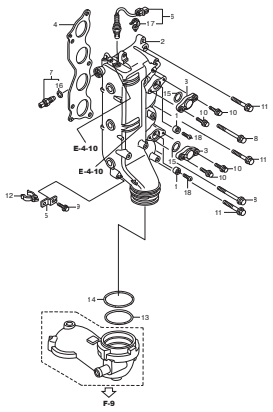

E-4-10 WATER HOSE

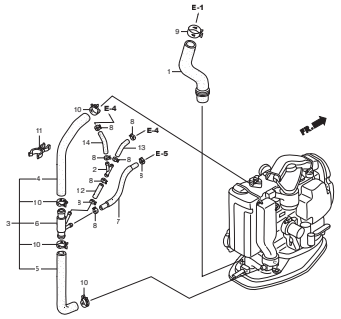

E-5 OIL PUMP/FLYWHEEL

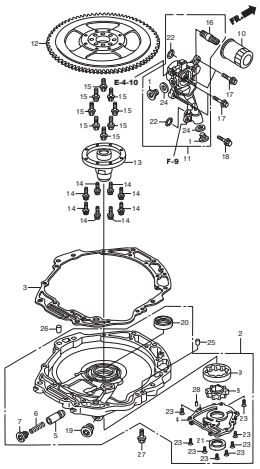

E-6 OIL PAN

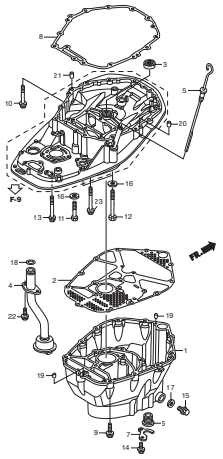

E-7 CRANKSHAFT/PISTON

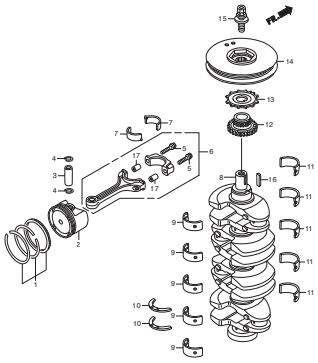

E-9 CAMSHAFT/VALVE

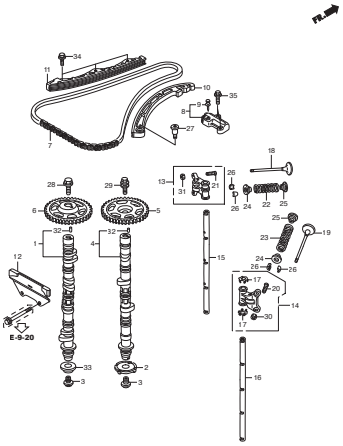

E-9-10 CHAIN CASE/THARMOSTAT

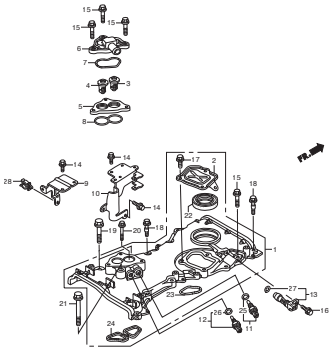

E-9-20 CYLINDER HEAD

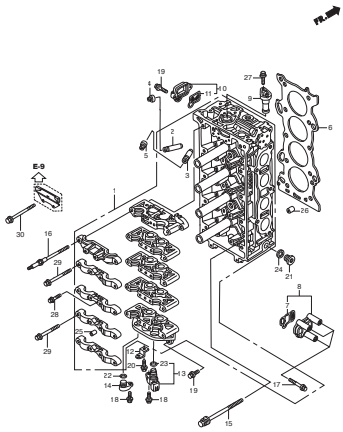

E-10 BALANCER SHAFT

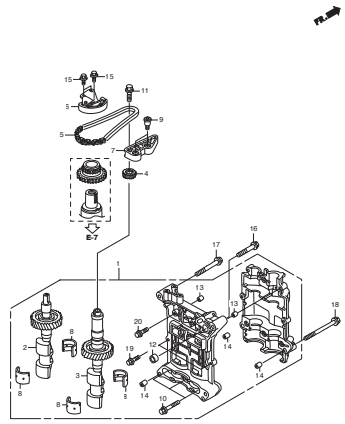

E-13 A.C.G BELT/SILENCER DUCT

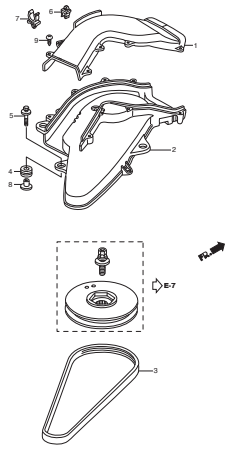

E-14 INTAKE MANIFOLD/INJECTOR

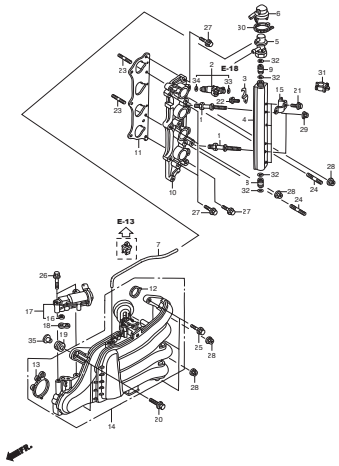

E-15 THROTTLE BODY

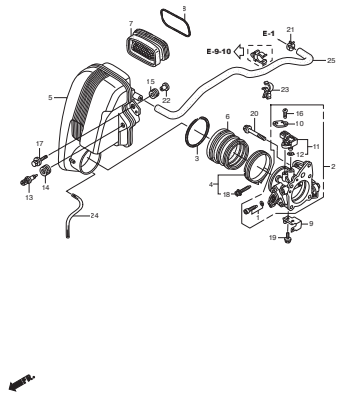

E-18 FUEL PUMP/FUEL HOSE

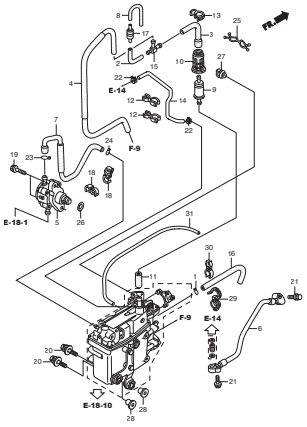

E-18-1 WATER SEPARATOR

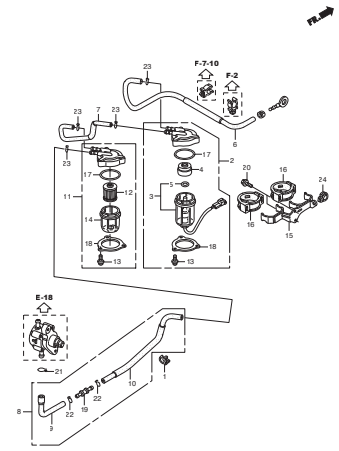

E-18-10 VAPOR SEPARATOR ASSY

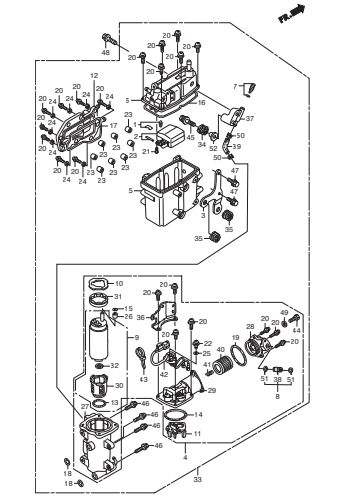

E-19 A.C.GENERATOR

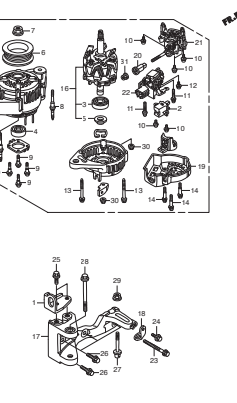

E-20 IGNITION COIL/SPARK PLUG

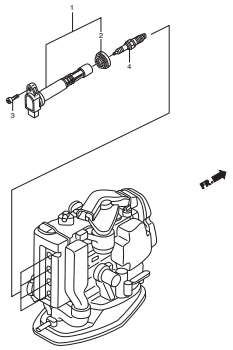

E-20-10 ELECTRONIC CONTROL UNIT

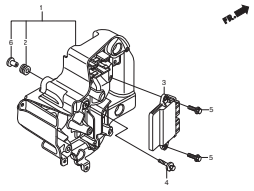

E-21 STARTER MOTOR

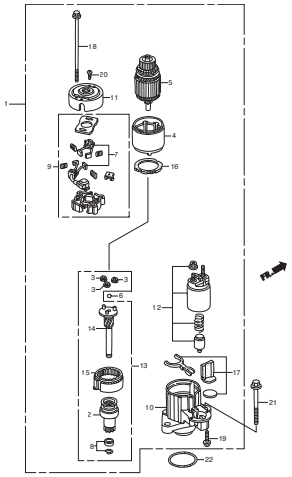

F-2 SHIFT SHAFT

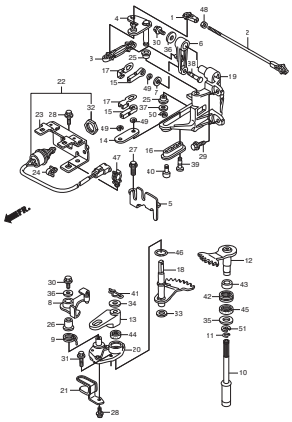

F-3 GEAR CASE

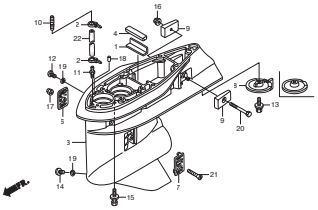

F-3-10 GEAR CASE ASSY

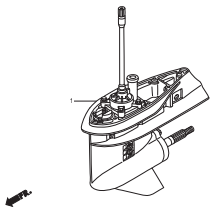

F-3-20 EXTENSION CASE

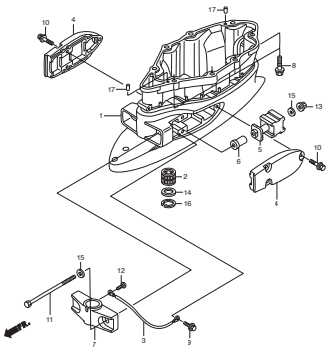

F-4 WATER PUMP/VERTICAL SHAFT

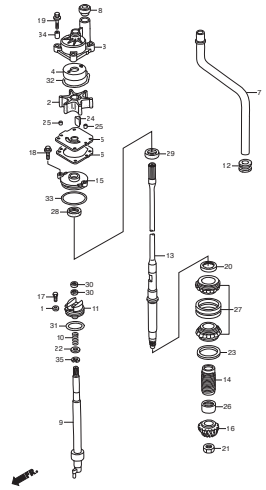

F-5 PROPELLER SHAFT/PROPELLER (LD/LU/XU)

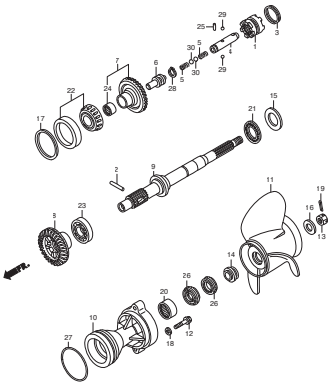

F-6 FUEL TUBE

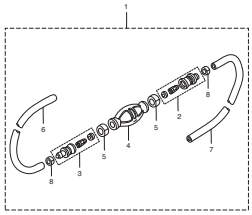

F-7 WIRE HARNESS

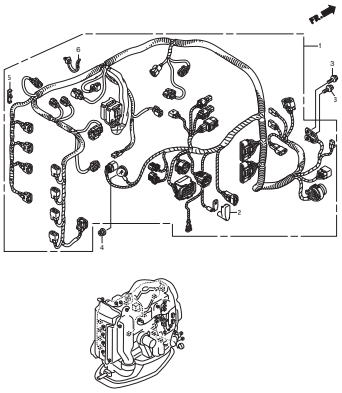

F-7-10 STARTER CABLE

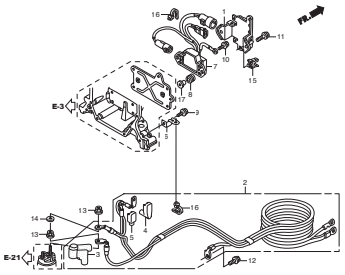

F-7-20 FUSE BOX/RELAY

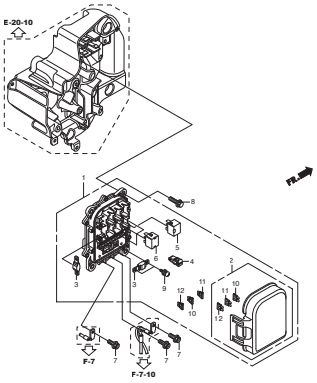

F-7-30 CLAMP

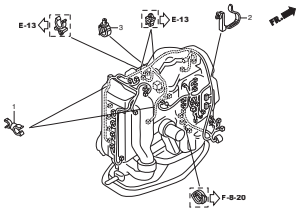

F-8 ENGINE COVER ASSY

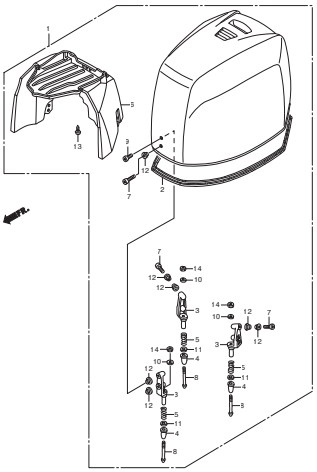

F-8-10 FR.COVER BRACKET/FR.LOCK

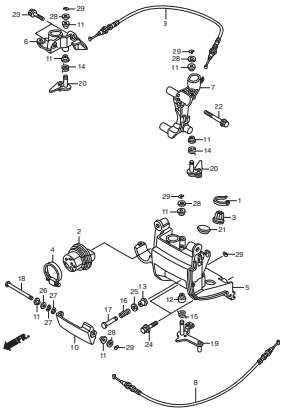

F-8-20 UNDER COVER

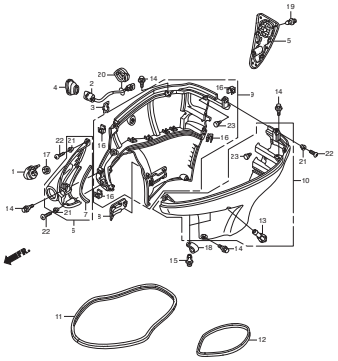

F-9 MOUNT CASE

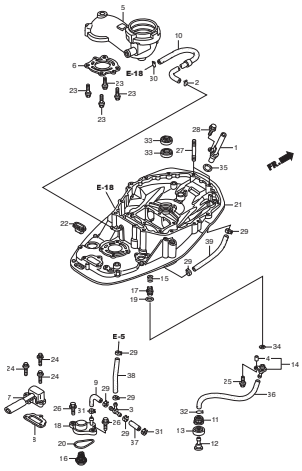

F-10 STERN BRACKET/SWIVEL CASE

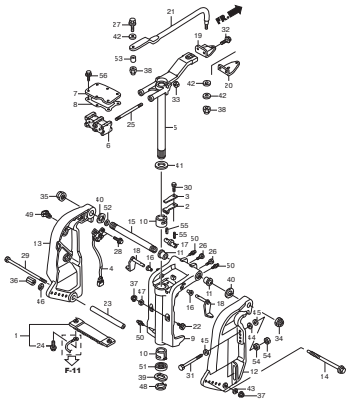

F-11 POWER TRIM-TILT

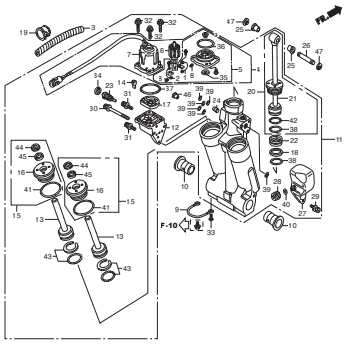

F-12 LABELS

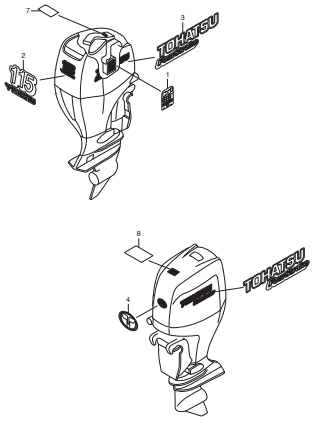

F-13 TOOLS

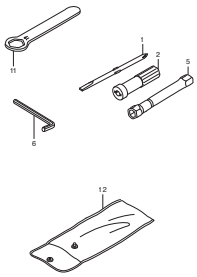

FOP-1 RIGGGING HOSE KIT

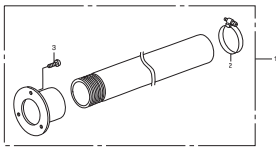

FOP-2 METER

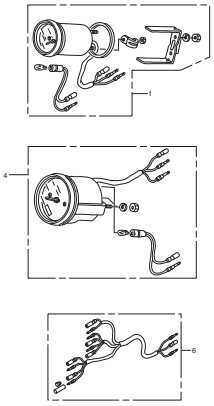

FOP-6 CONTROL PANEL (1)

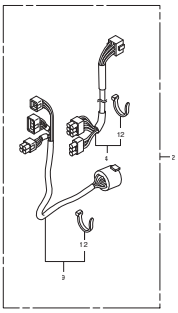

FOP-6-1 CONTROL PANEL (2)

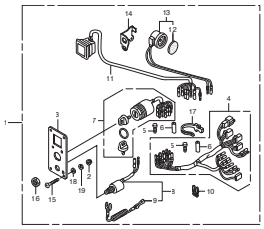

FOP-7 TRIM ADJUST PLATE SET

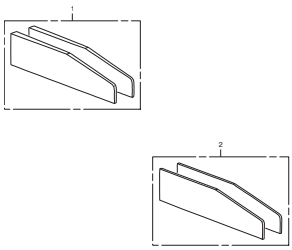

FOP-8 REMOTE CONTROL (TOP MOUNT SINGLE TYPE) (RIGHT)

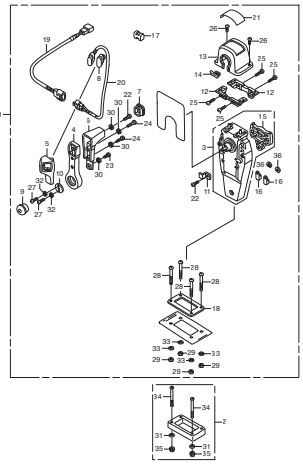

FOP-8-2 REMOTE CONTROL (TOP MOUNT DUAL TYRE) (RIGHT)

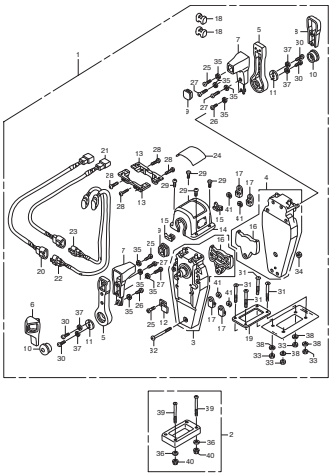

FOP-8-4 REMOTE CONTROL (FLUSH MOUNT TYRE) (RIGHT)

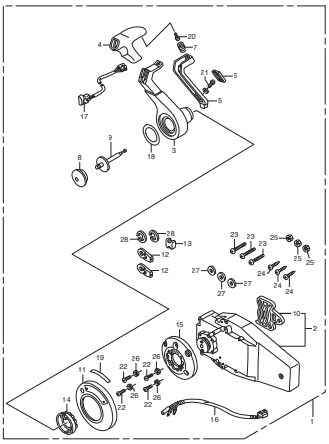

FOP-8-6 REMOTE CONTROL

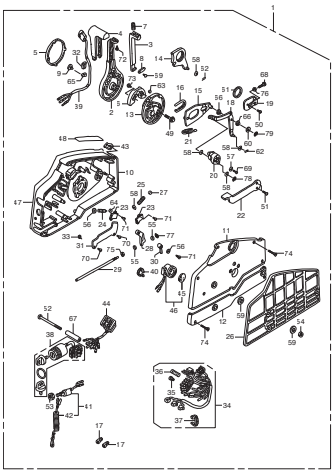

FOP-9 BOLT KIT

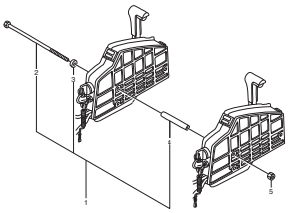

FOP-10 WATER PUMP IMPELLER KIT (1)

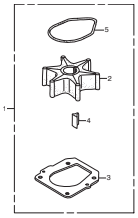

FOP-10-1 WATER PUMP IMPELLER KIT (2)

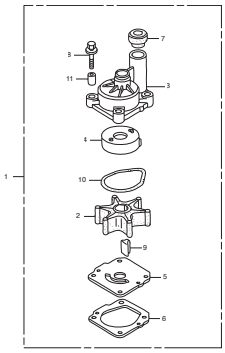

FOP-11 INTERFACE CABLE KIT

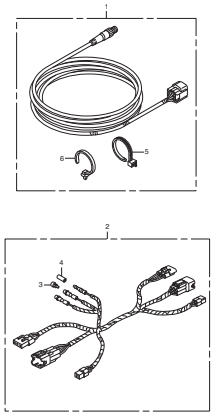

FOP-12 TROLLING CONTROL SWITCH

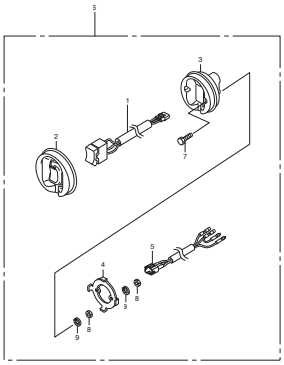

FOP-13 SPEED SENSOR TUBE KIT

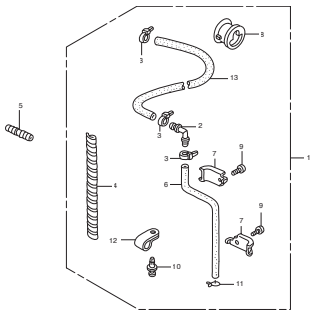

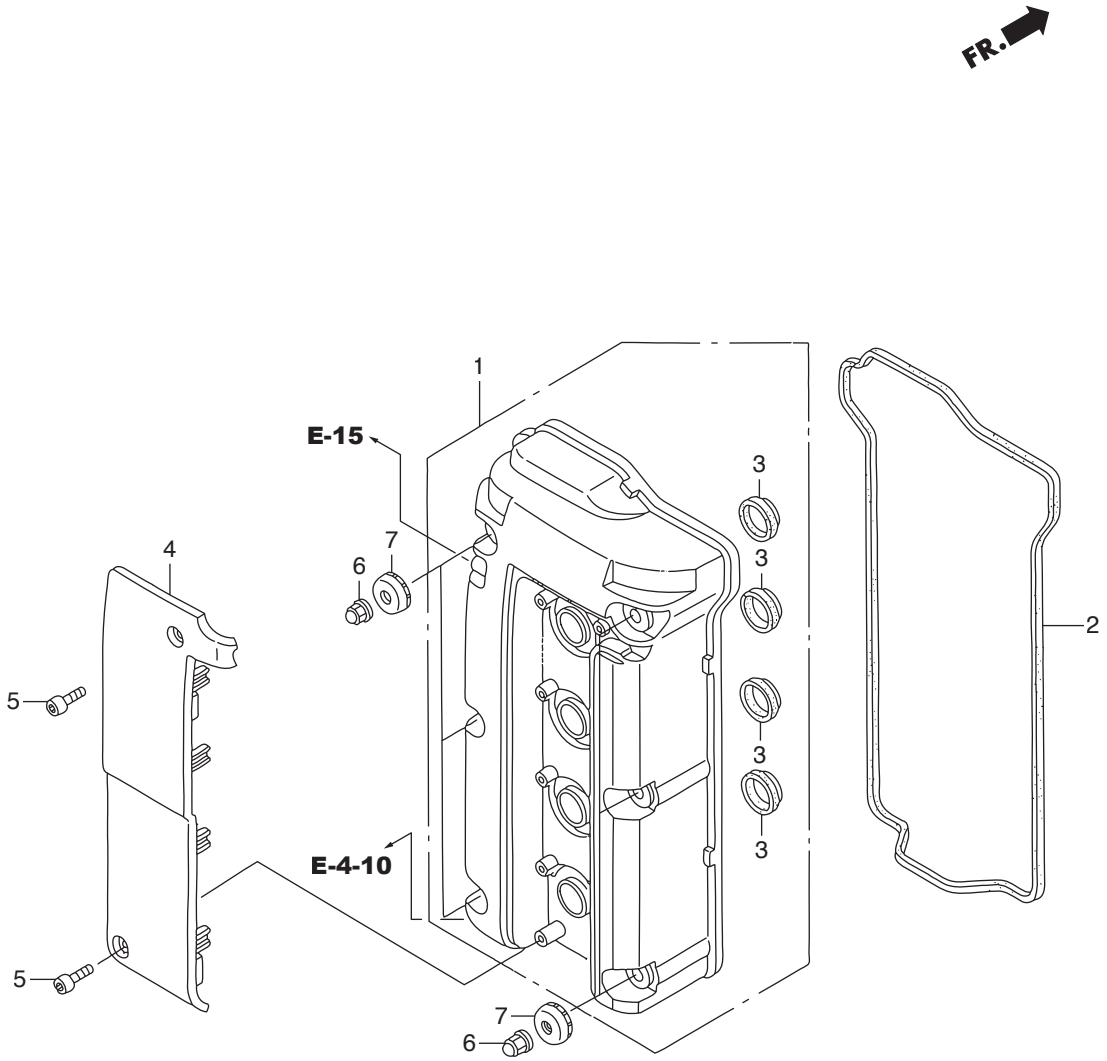
FR.
1
E-15
3
7
4
6
3
2
5
3
3
E-4-10
5
7
6

Ref.No.		Part No.	Description	Q'ty BFT115A	Remarks
E-1	1	HZY6-12310-010ZA	COVER COMP., CYLINDER HEAD	1	*NH8* DARK GRAY
E-1	2	HPNA-12341-000	PACKING, CYLINDER HEAD COVER	1	
E-1	3	HPCX-12342-004	SEAL, SPARK PLUG TUBE(NOK)	4	
E-1	4	HZY6-12500-000	COVER COMP., PLUG HOLE COIL	1	
E-1	5	HZY3-90084-000	BOLT, SOCKET, 6X25	2	
E-1	6	HZY6-90201-000	NUT, FLANGE CAP, 6MM	6	
E-1	7	HZY6-90401-000	WASHER, HEAD COVER	6	

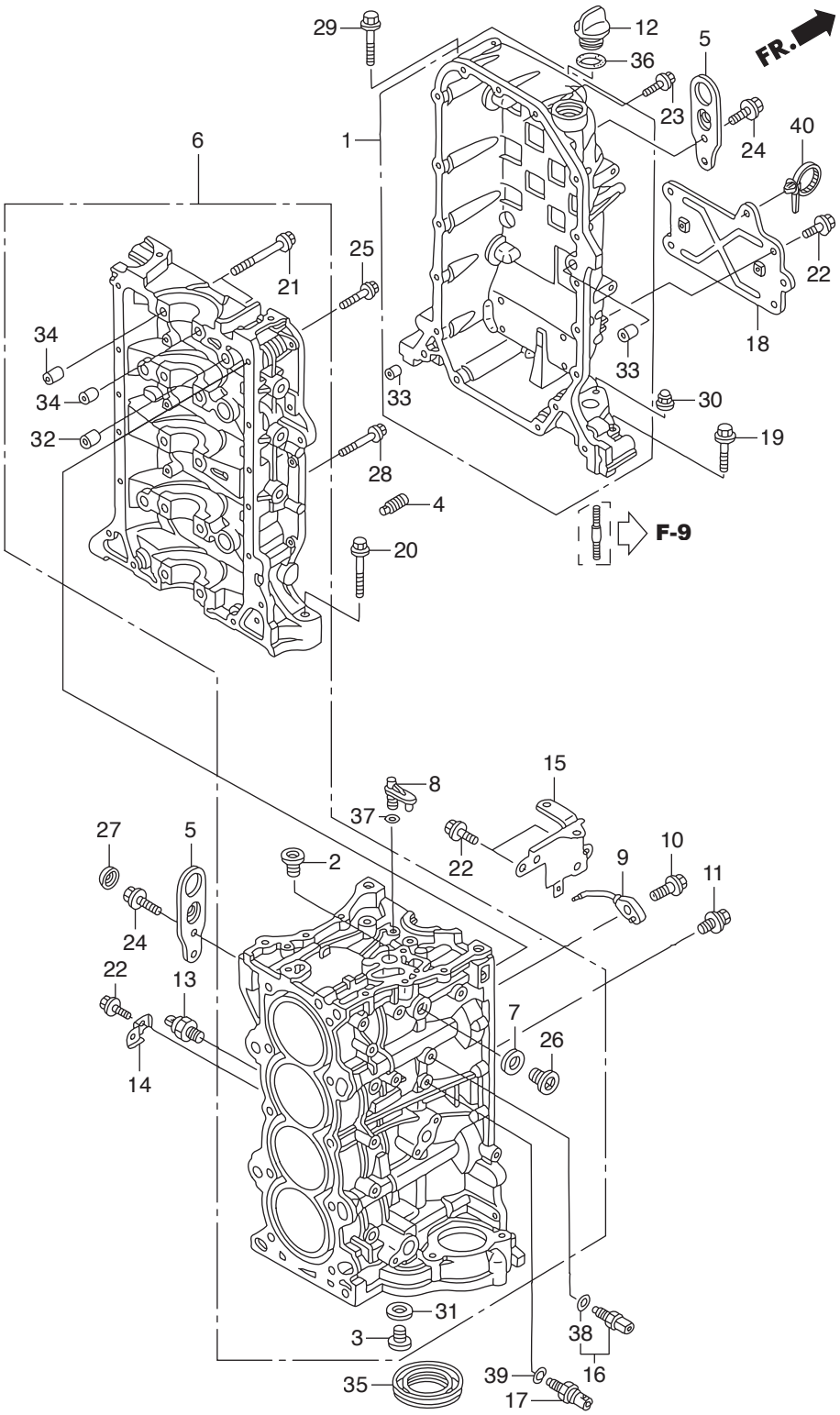
29
12
36
5
FR.
23
24
40
6
1
25
21
22
18
34
33
34
33
30
32
19
28
4
F-9
20
15
8
37
27
5
22
10
2
9
11
24
22
13
7
26
14
31
3
38
16
35
39
17

Ref.No.		Part No.	Description	Q'ty	Remarks
				BFT115A	
E-3	1	HZY6-11100-405	CRANKCASE COMP.	1	
E-3	2	HPNA-11106-300	BOLT, SEALING, 20MM	1	
E-3	3	HPR4-11106-013	BOLT, SEALING, 28MM	1	
E-3	4	HPNA-11135-000	ORIFICE, LOWER BLOCK	1	
E-3	5	HZY6-11911-000	HANGER, ENGINE	2	
E-3	6	HZY6-12000-415ZA	BLOCK ASSY., CYLINDER	1	*NH8* DARK GRAY
E-3	7	HZV5-12214-000	WASHER, SEALING(22MM)	1	
E-3	8	HZY6-15152-000	ORIFICE, OIL JET	1	
E-3	9	HPRB-15280-A00	BODY COMP., OIL JET	2	
E-3	10	HPRA-15290-000	BOLT COMP., OIL JET	2	
E-3	11	HZY6-15299-000	BOLT-WASHER, 8X10	2	
E-3	12	H921-15611-000	CAP, OIL(YELLOW)	1	
E-3	13	HZY6-30530-003	SENSOR ASSY., KNOCK	1	
E-3	14	HZW9-32114-730	BRACKET, CLIP B	1	
E-3	15	HZY6-32114-010	BRACKET D, HARNESS CLIP	1	
E-3	16	HZY3-35673-003	SENSOR ASSY., WATER	1	TEMPERATURE
E-3	17	HRNA-37260-A01	SENSOR, OIL PRESSURE	1	
E-3	18	HZY6-38552-000	BRACKET, RELAY	1	
E-3	19	HZY6-90001-000	BOLT, FLANGE, 8X55	2	
E-3	20	HZY6-90005-000	BOLT, FLANGE, 12X83	1	
E-3	21	HPNA-90006-003	BOLT-WASHER, 11X95	10	
E-3	22	HZW9-90011-000	BOLT, FLANGE, 6X14(CT200)	7	
E-3	23	HZW9-90016-000	BOLT, FLANGE, 6X25	18	
E-3	24	HZY3-90026-000	BOLT, FLANGE, 8X20	4	
E-3	25	HZY3-90054-000	BOLT, FLANGE, 8X35	10	
E-3	26	HZV5-90081-010	BOLT, SEALING, 22MM	1	
E-3	27	HZY6-90082-003	CAP, BOLT, 8MM	1	
E-3	28	HZW4-90156-000	BOLT, FLANGE, 8X50	4	
E-3	29	HZW4-90162-000	BOLT, FLANGE, 10X70	1	

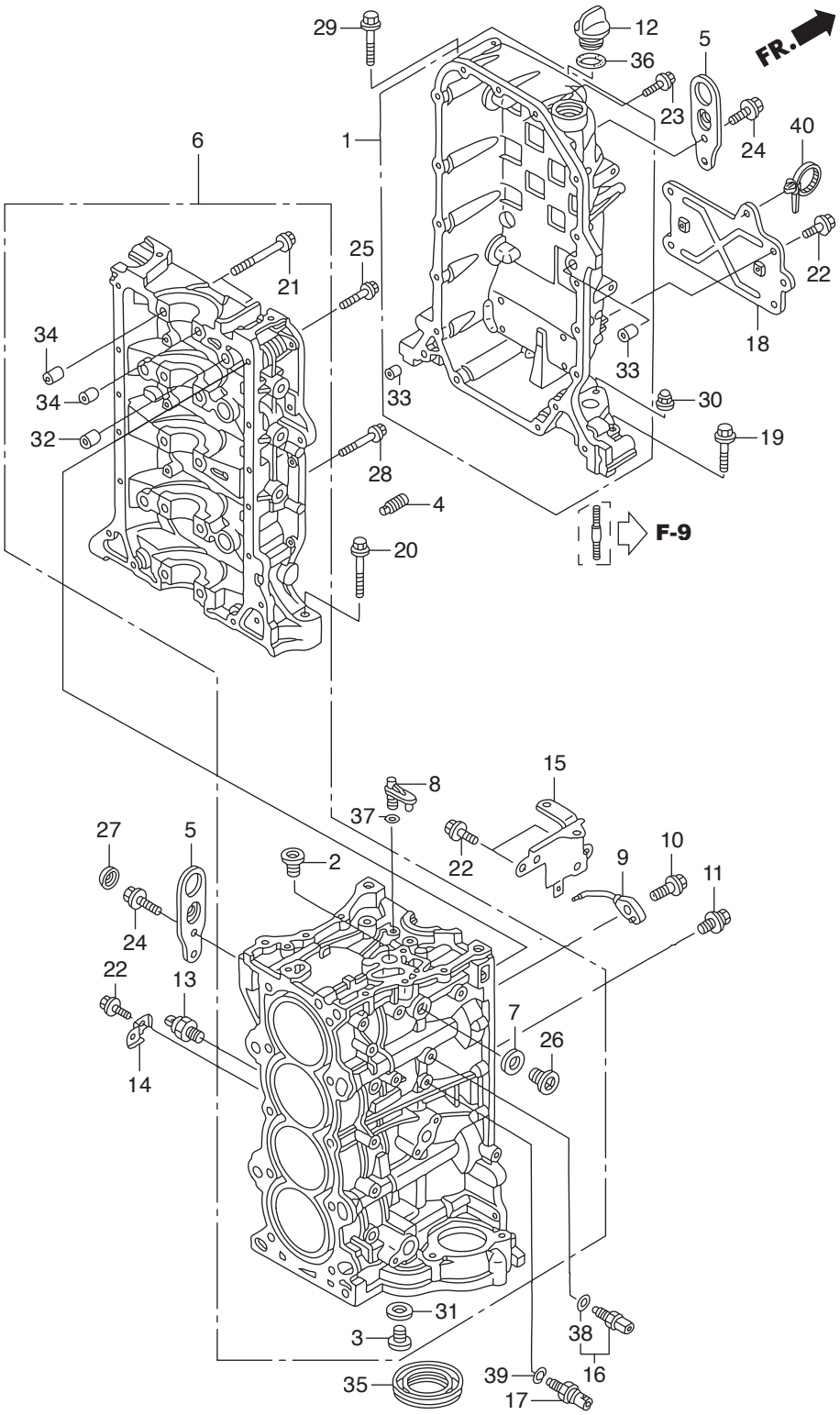
29
12
36
5
FR.
23
24
40
6
1
25
21
22
18
34
33
34
33
30
32
19
28
4
F-9
20
15
8
37
27
5
22
10
2
9
11
24
22
13
7
26
14
31
3
38
16
35
39
17

Ref.No.		Part No.	Description	Q'ty	Remarks
				BFT115A	
E-3	30	HZY3-90204-000	NUT, FLANGE CAP, 10MM	2	
E-3	31	HPR4-90401-000	WASHER, SEALING, 28MM	1	
E-3	32	HPE0-90703-000	DOWEL PIN, 18X22	1	
E-3	33	HPC6-90715-000	DOWEL PIN, 13X20	2	
E-3	34	HPNA-90715-000	DOWEL PIN, 13X14	10	
E-3	35	HPNA-91214-014	OIL SEAL, 80X98X10(ARAI)	1	
E-3	36	H805-91301-000	O-RING, 26X2.7	1	
E-3	37	HZY6-91305-003	O-RING, 6.5X1.5	1	
E-3	38	HPNA-91307-003	O-RING, 9.5X1.9	1	
E-3	39	HPR3-91319-003	O-RING, 13X1.5(ARAI)	1	
E-3	40	HS0A-91541-003	CLIP, HARNESS BAND(BLACK)	1	(145MM)

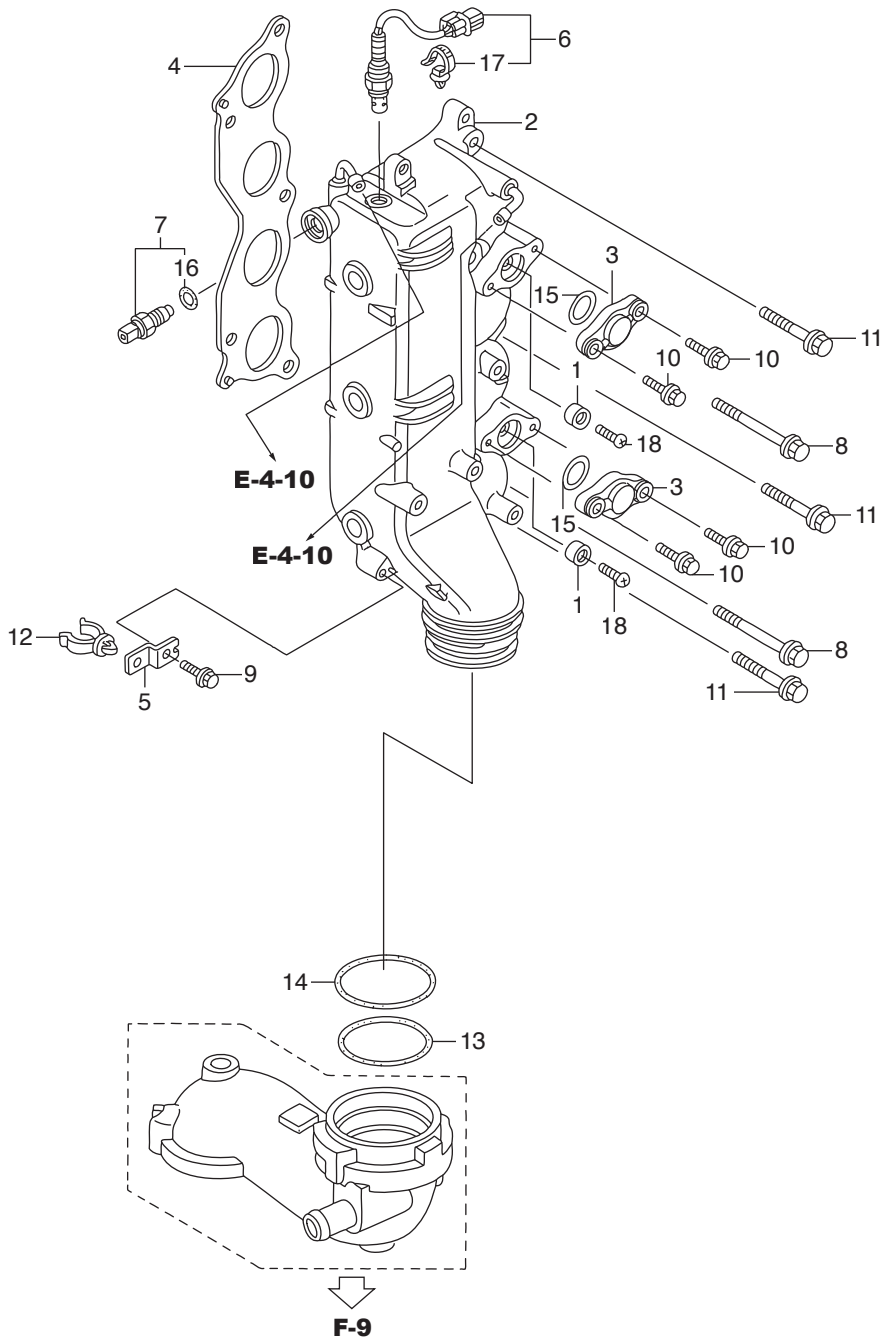
6
17
4
2
7
16
3
15
11
10
10
1
8
18
E-4-10
3
11
15
10
E-4-10
10
1
18
12
8
9
5
11
14
13
F-9

Ref.No.		Part No.	Description	Q'ty	Remarks
				BFT115A	
E-4	1	HZV5-12155-000	METAL, ANODE	2	
E-4	2	HZY6-18110-415ZA	MANIFOLD COMP., EX.	1	*NH8* DARK GRAY
E-4	3	HZY6-18112-030ZA	COVER, EX. MANIFOLD	2	*NH8* DARK GRAY
E-4	4	HZY6-18115-003	GASKET COMP., EX. MANIFOLD	1	
E-4	5	HZY6-19268-000	BRACKET, WATER TUBE CLAMP	1	
E-4	6	HZY6-35668-003	SENSOR, LAF	1	
E-4	7	HZY3-35673-003	SENSOR ASSY., WATER	1	TEMPERATURE
E-4	8	HZY6-90013-000	BOLT, FLANGE, 10X75	2	
E-4	9	HZY3-90021-000	BOLT, FLANGE, 6X14	1	
E-4	10	HZY3-90030-000	BOLT, FLANGE, 6X22	4	
E-4	11	HZW4-90170-000	BOLT, FLANGE, 10X45	3	
E-4	12	HZY6-90604-003	CLAMP B, WATER TUBE	1	
E-4	13	HZY6-91301-003	O-RING, 76.4X3.1	1	
E-4	14	HZY6-91302-003	O-RING, 79.8X3.1	1	
E-4	15	HHN0-91305-A00	O-RING, 37X2.4	2	
E-4	16	HPNA-91307-003	O-RING, 9.5X1.9	1	
E-4	17	HSV4-91540-003	CLIP, HARNESS BAND(NATURAL)	1	(145.2MM)
E-4	18	HCO-93500-06018-4J	SCREW, PAN, 6X18	2	

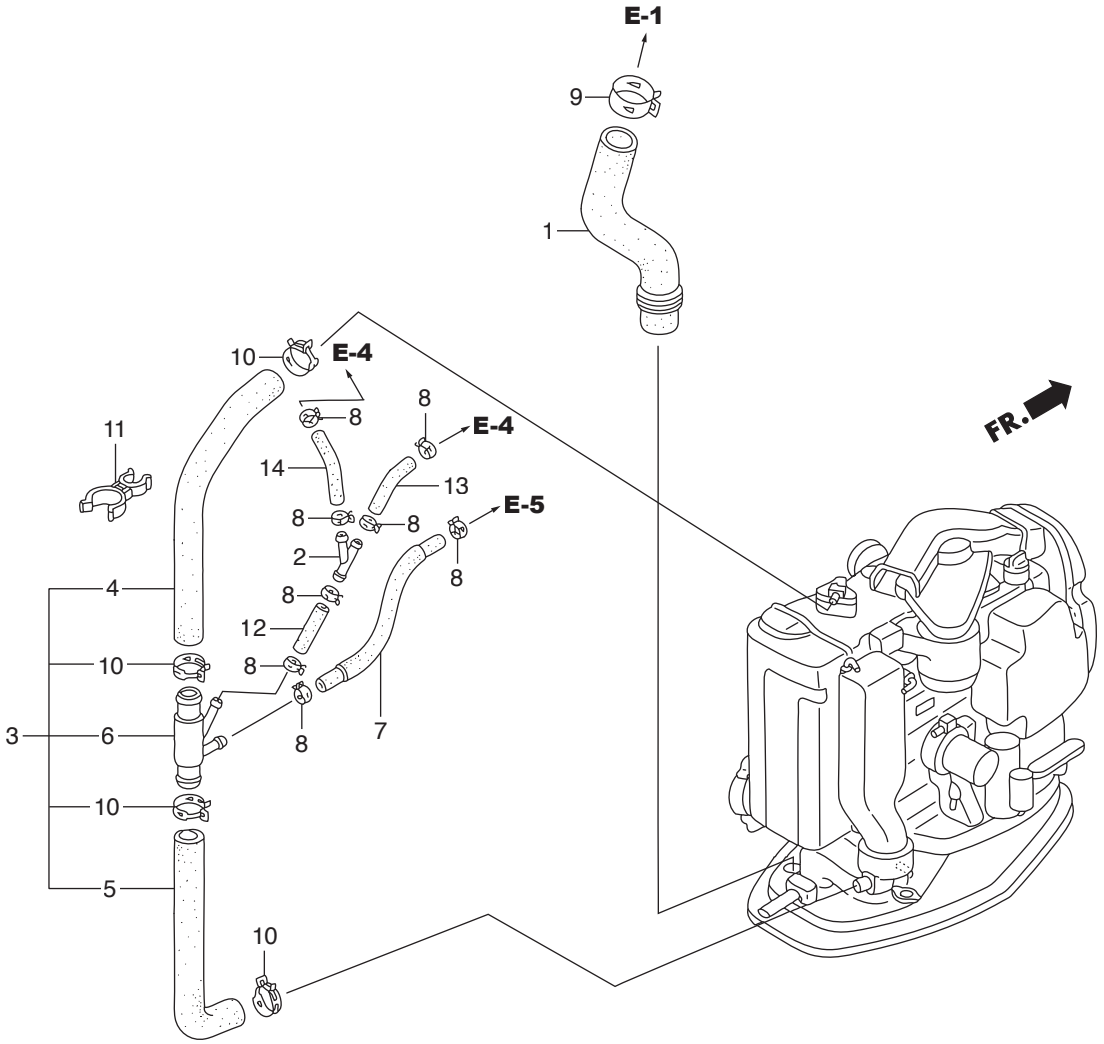
E-1
9
1
10
E-4
8
8
E-4
11
14
13
E-5
8
8
2
8
8
4
12
10
8
3
6
8
7
10
5
10
FR.

Ref.No.		Part No.	Description	Q'ty BFT115A	Remarks
E-4-10	1	HZY6-15425-010	TUBE, OIL	1	
E-4-10	2	HMY1-16959-000	JOINT, FUEL TUBE	1	
E-4-10	3	HZY6-19260-020	TUBE COMP., WATER RELIEF	1	
E-4-10	4	HZY6-19261-010	TUBE A, WATER RELIEF	1	
E-4-10	5	HZY6-19262-010	TUBE B, WATER RELIEF	1	
E-4-10	6	HZY6-19263-000	JOINT, FOUR-WAY	1	
E-4-10	7	HZY6-19266-000	TUBE COMP. E, WATER	1	
E-4-10	8	HZY3-90601-030	CLAMP, TUBE(D10.5)	8	
E-4-10	9	HZY3-90602-020	CLAMP, TUBE(D32.5)	1	
E-4-10	10	HZY6-90602-020	CLAMP, TUBE(D25.0)	4	
E-4-10	11	HZY6-90603-003	CLAMP, WATER TUBE	1	
E-4-10	12	HCO-95005-70075-30	TUBE, 7X75	1	(HC-95005-70001-30M)
E-4-10	13	HCO-95005-70090-30	TUBE, 7X90	1	(HC-95005-70001-30M)
E-4-10	14	HCO-95005-70120-30	TUBE, 7X120	1	(HC-95005-70001-30M)

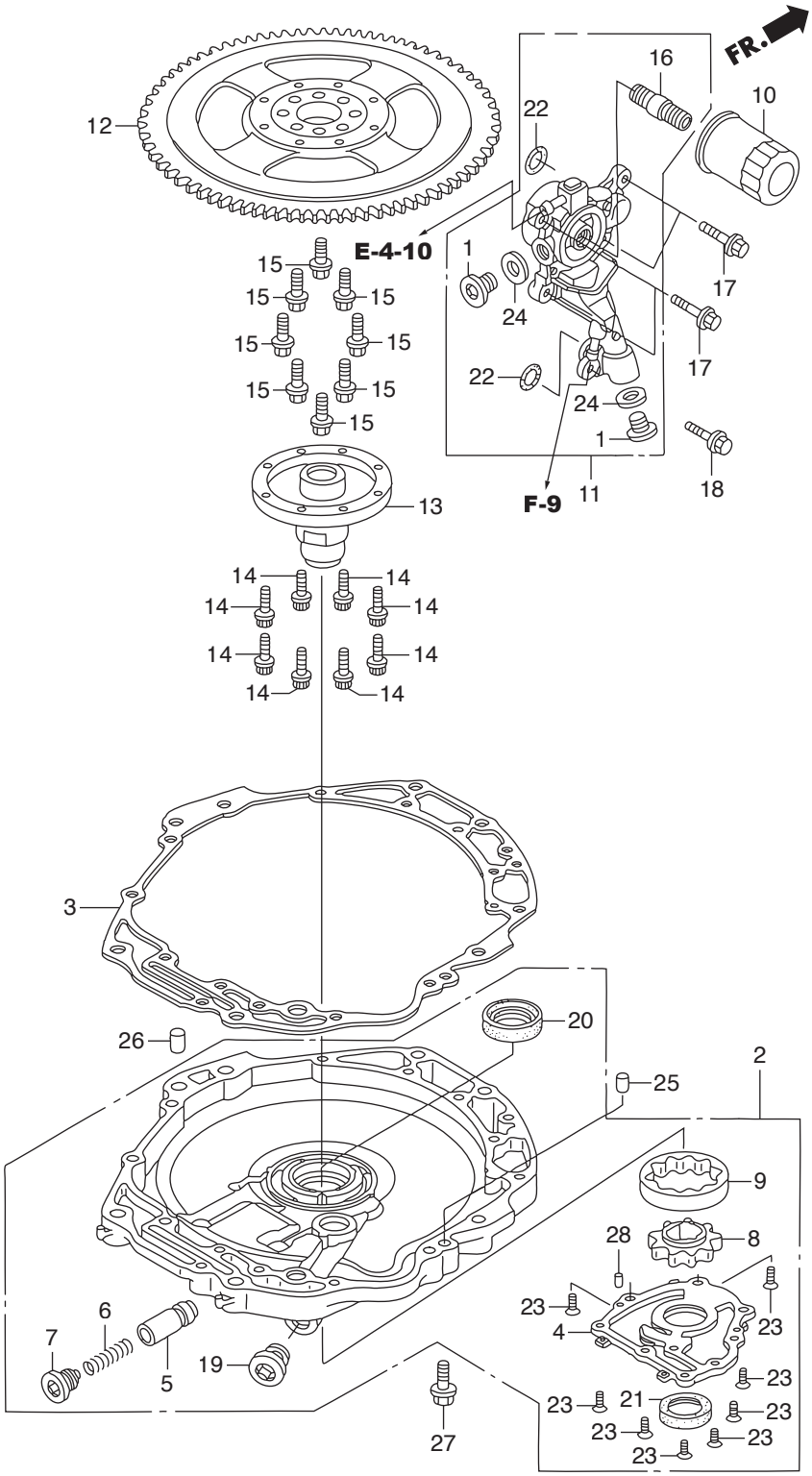
FR.
12
16
10
22
E-4-10
1
24
17
15
22
24
1
18
11
F-9
13
14
3
20
26
2
25
9
28
8
23
4
6
7
5
19
27
21

Ref.No.		Part No.	Description	Q'ty	Remarks
				BFT115A	
E-5	1	HZW1-12217-010	BOLT, SEALING, 20MM	2	
E-5	2	HZY6-15100-000ZA	PUMP ASSY., OIL	1	*NH8* DARK GRAY
E-5	3	HZY6-15112-000	PACKING, OIL PUMP BODY	1	
E-5	4	HZY6-15121-000	COVER, OIL PUMP	1	
E-5	5	HPE0-15231-000	VALVE, RELIEF	1	
E-5	6	HPG6-15232-000	SPRING, RELIEF VALVE	1	
E-5	7	HPC6-15233-000	BOLT, SEALING, 18MM	1	
E-5	8	HZW5-15331-003	ROTOR, INNER OIL PUMP	1	
E-5	9	HZW5-15341-003	ROTOR, OUTER OIL PUMP	1	
E-5	10	HRTA-15400-004	CARTRIDGE, OIL FILTER	1	(TOYO ROKI)
E-5	11	HZY6-15410-010ZA	FLANGE COMP., OIL FILTER	1	*NH8* DARK GRAY
E-5	12	HZY6-31110-000ZA	FLYWHEEL COMP.	1	*TBLACK* BLACK
E-5	13	HZY3-31116-000	BOSS, FLYWHEEL	1	
E-5	14	HZW5-90002-013	BOLT, SPECIAL, 8MM	8	
E-5	15	HPH3-90011-000	BOLT, FLANGE, 12MM	8	
E-5	16	HPH1-90015-013	HOLDER, OIL FILTER	1	
E-5	17	HZW9-90016-000	BOLT, FLANGE, 6X25	4	
E-5	18	HZW5-90018-000	BOLT, FLANGE, 6X20	1	
E-5	19	HZV5-90081-010	BOLT, SEALING, 22MM	2	
E-5	20	HZW5-91201-003	OIL SEAL, 46X60X9	1	
E-5	21	HP01-91212-003	OIL SEAL, 31X46X7(NOK)	1	
E-5	22	HVD6-91360-003	O-RING, 22.5X2.4	2	
E-5	23	HCO-93600-06016-0A	SCREW, FLAT, 6X16	9	
E-5	24	HCO-94109-20000	WASHER, DRAIN PLUG, 20MM	2	
E-5	25	HCO-94301-10160	DOWEL PIN, 10X16	1	
E-5	26	HCO-94301-14200	DOWEL PIN, 14X20	1	
E-5	27	HCO-95701-08032-08	BOLT, FLANGE, 8X32	5	
E-5	28	HCO-96220-50080	ROLLER, 5X8	2	

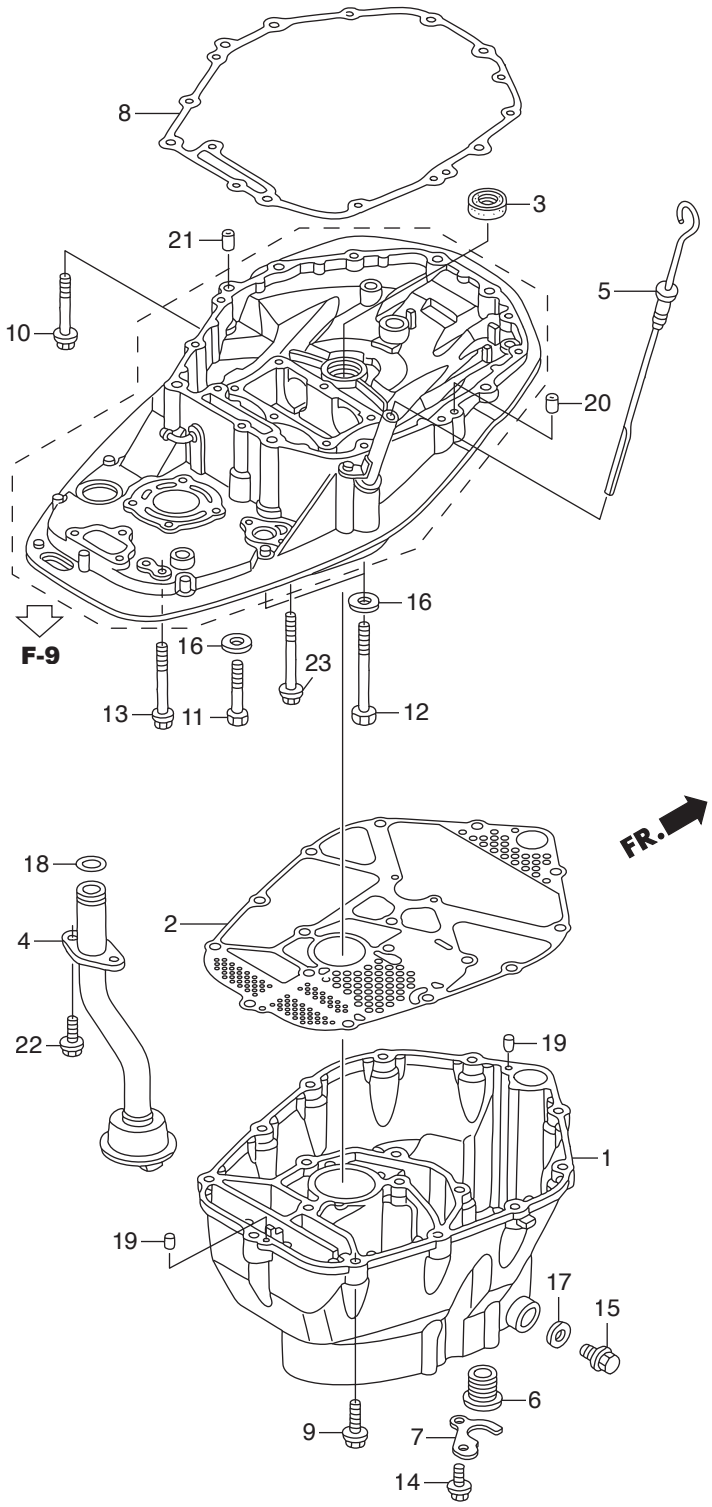
8
3
21
5
10
20
16
F-9
16
23
13
11
12
FR.
18
2
4
22
19
1
19
17
15
6
9
7
14

Ref.No.		Part No.	Description	Q'ty BFT115A	Remarks
E-6	1	HZY6-11321-010ZB	CASE, OIL	1	*TGRAY* GRAY
E-6	2	HZY6-11381-010	PACKING, OIL PAN	1	
E-6	3	HZW5-15113-000	RUBBER, OIL PUMP	1	
E-6	4	HZY6-15220-010	STRAINER COMP., OIL	1	
E-6	5	HZY6-15655-000	GAUGE COMP., OIL LEVEL	1	
E-6	6	HZW1-19252-000	GROMMET, WATER TUBE	1	
E-6	7	HZY6-19254-000	PLATE, WATER TUBE	1	
E-6	8	HZY6-23172-000	GASKET, MOUNT CASE	1	
E-6	9	HZY6-90002-000	BOLT, FLANGE, 10X40	16	
E-6	10	HZY6-90017-000	BOLT, FLANGE, 10X80	1	
E-6	11	HZY6-90018-000	BOLT, HEX., 12X70	1	
E-6	12	HZY6-90019-000	BOLT, HEX., 12X130	2	
E-6	13	HZY3-90046-000	BOLT, FLANGE, 8X100	1	
E-6	14	HZW9-90102-000	BOLT, FLANGE, 6X12	1	
E-6	15	HZV5-90131-000	BOLT, DRAIN PLUG	1	
E-6	16	HZV5-90559-000	WASHER, PLAIN, 12MM	3	
E-6	17	HZE2-90601-000	WASHER, DRAIN PLUG, 12MM	1	
E-6	18	HPC6-91324-000	O-RING, 20.6X2.6	1	
E-6	19	HCO-94301-06100	DOWEL PIN, 6X10	2	
E-6	20	HCO-94301-10160	DOWEL PIN, 10X16	1	
E-6	21	HCO-94301-14200	DOWEL PIN, 14X20	1	
E-6	22	HCO-95701-06018-09	BOLT, FLANGE, 6X18	2	
E-6	23	HCO-95701-10110-09	BOLT, FLANGE, 10X110	2	

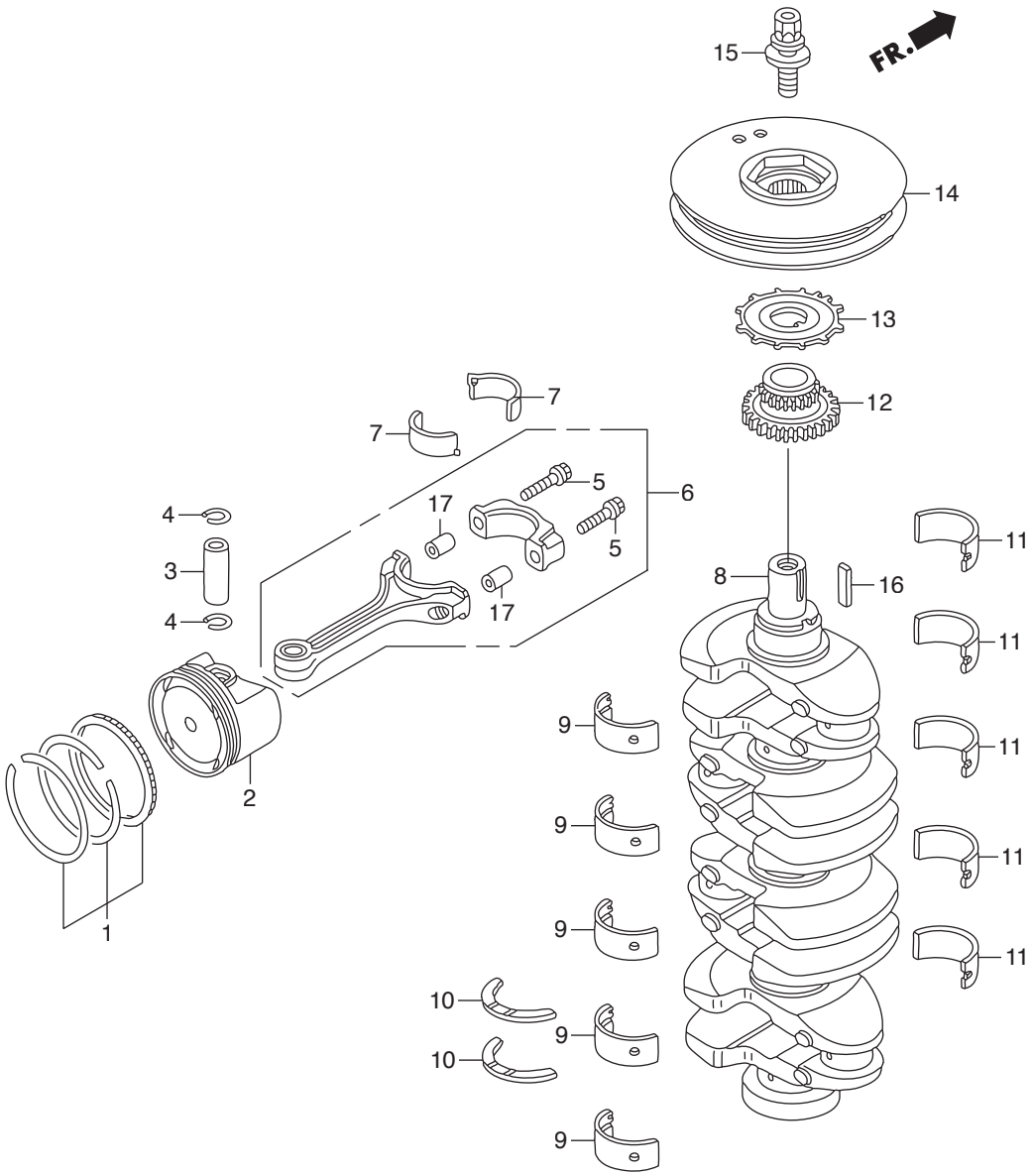
15
FR.
14
13
12
7
7
5
6
17
4
5
3
17
4
8
16
11
11
9
11
2
9
11
9
11
1
10
9
10
9

Ref.No.		Part No.	Description	Q'ty BFT115A	Remarks
E-7	1	HZY6-13010-000	RING SET, PISTON(STD.)	4	
E-7	2	HZY6-13101-000	PISTON A	4	
E-7		HZY6-13102-000	PISTON B	4	
E-7	3	HPNA-13111-010	PIN, PISTON	4	
E-7	4	HP5A-13115-000	CLIP, PISTON PIN	8	
E-7	5	HP8A-13204-A01	BOLT, CONNECTING ROD	8	
E-7	6	HPPA-13210-000	ROD COMP., CONNECTING	4	
E-7	7	HZY6-13211-004	BEARING A, CONNECTING ROD	8	(BLUE)
E-7		HZY6-13212-004	BEARING B, CONNECTING ROD	8	(BLACK)
E-7		HZY6-13213-004	BEARING C, CONNECTING ROD	8	(BROWN)
E-7		HZY6-13214-004	BEARING D, CONNECTING ROD	8	(GREEN)
E-7		HZY6-13215-004	BEARING E, CONNECTING ROD	8	(YELLOW)
E-7		HZY6-13216-004	BEARING F, CONNECTING ROD	8	(PINK)
E-7		HZY6-13217-004	BEARING G, CONNECTING ROD(RED)	8	
E-7	8	HPPA-13310-000	CRANKSHAFT COMP.	1	
E-7	9	HPNA-13321-003	BEARING A, MAIN UPPER(BLUE)	5	(DAIDO)
E-7		HPNA-13322-003	BEARING B, MAIN UPPER(BLACK)	5	(DAIDO)
E-7		HPNA-13323-003	BEARING C, MAIN UPPER(BROWN)	5	(DAIDO)
E-7		HPNA-13324-003	BEARING D, MAIN UPPER(GREEN)	5	(DAIDO)
E-7		HPNA-13325-003	BEARING E, MAIN UPPER(YELLOW)	5	(DAIDO)
E-7		HPNA-13326-003	BEARING F, MAIN UPPER(PINK)	5	(DAIDO)
E-7					
E-7	10	HZY6-13331-013	WASHER, THRUST	2	
E-7	11	HPNA-13341-003	BEARING A, MAIN LOWER(BLUE)	5	(DAIDO)
E-7		HPNA-13342-003	BEARING B, MAIN LOWER(BLACK)	5	(DAIDO)
E-7		HPNA-13343-003	BEARING C, MAIN LOWER(BROWN)	5	(DAIDO)
E-7		HPNA-13344-003	BEARING D, MAIN LOWER(GREEN)	5	(DAIDO)
E-7		HPNA-13345-003	BEARING E, MAIN LOWER(YELLOW)	5	(DAIDO)
E-7		HPNA-13346-003	BEARING F, MAIN LOWER(PINK)	5	(DAIDO)

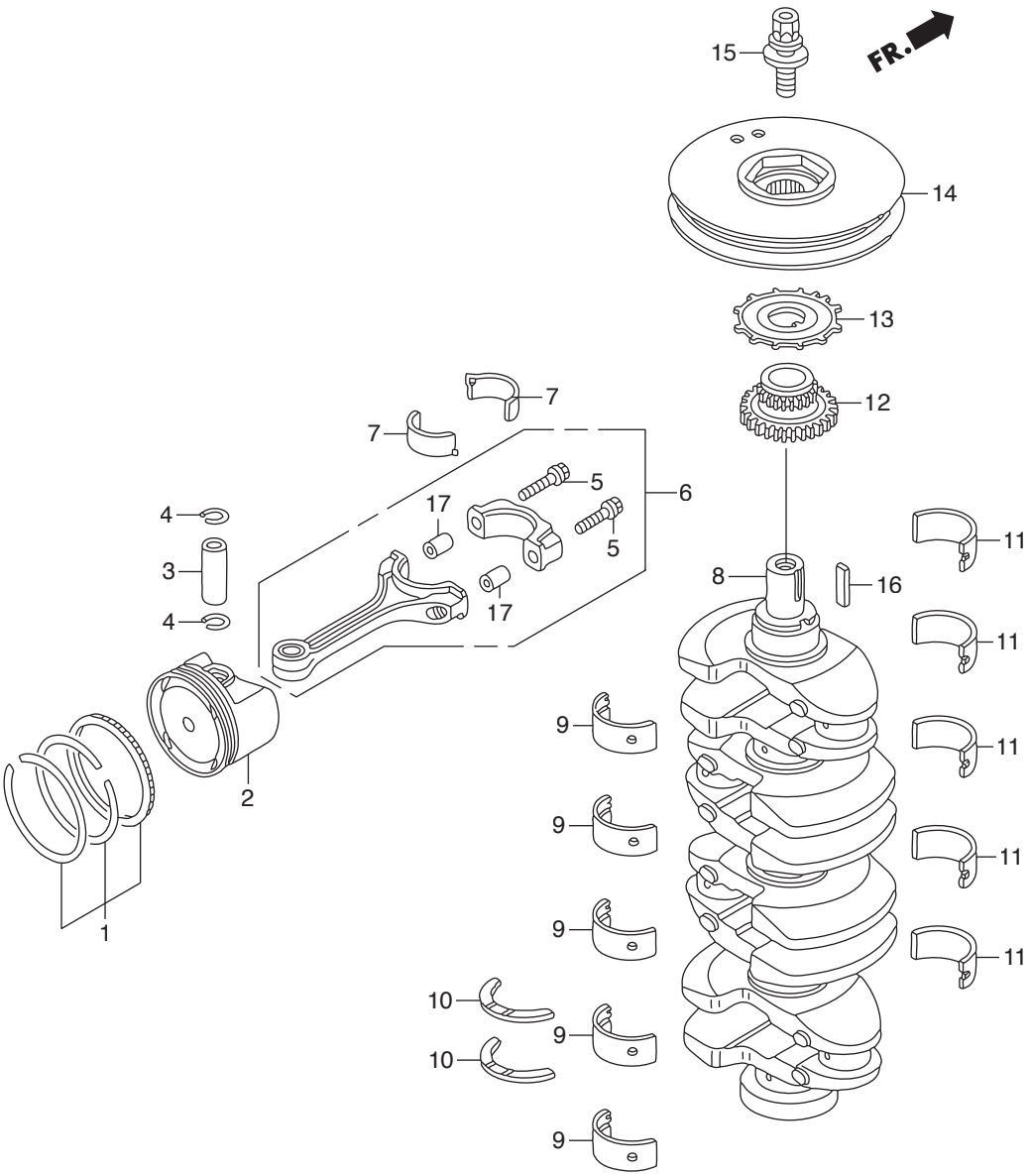
15
FR.
14
13
12
7
7
5
6
17
4
5
3
17
4
8
16
11
11
9
11
2
9
11
9
11
1
10
9
10
9

Ref.No.		Part No.	Description	Q'ty	Remarks
				BFT115A	
E-7	12	HRAA-13620-A02	SPROCKET COMP., CHAIN DRIVE	1	
E-7	13	HPNA-13622-003	PLATE, CRANK PULSER	1	
E-7	14	HZY6-13811-000	PULLEY, CRANKSHAFT	1	
E-7	15	HPCX-90017-013	BOLT-WASHER, 16X49	1	
E-7	16	HPNA-90704-000	KEY, 4.5X21	1	
E-7	17	HCO-94301-10120	DOWEL PIN, 10X12	8	

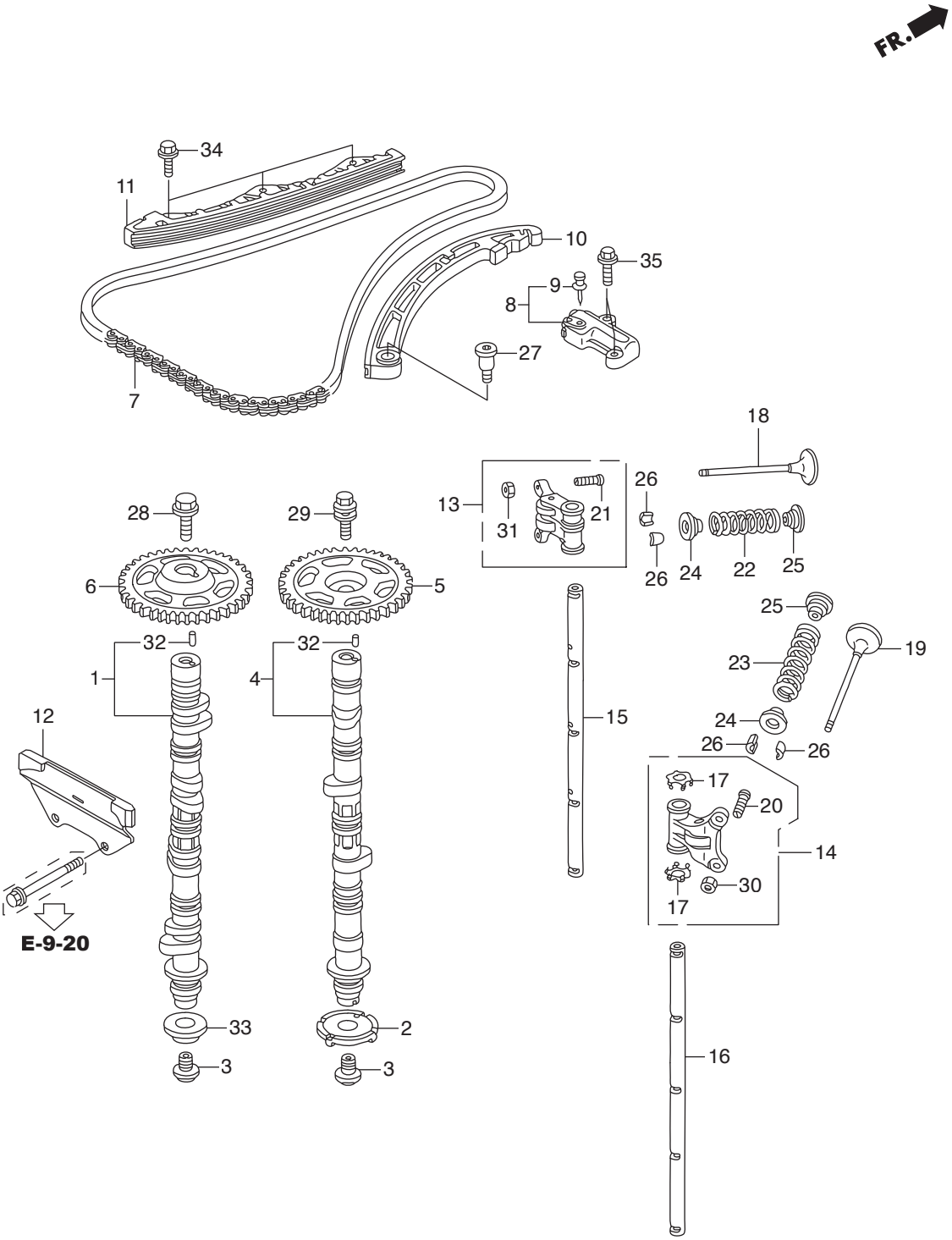
FR.
34
11
10
35
9
8
27
7
18
13
26
21
31
28
29
6
5
24
22
25
32
32
1
4
12
15
25
23
19
24
26
26
17
20
14
30
17
E-9-20
33
2
3
3
16

Ref.No.		Part No.	Description	Q'ty	Remarks
				BFT115A	
E-9	1	HZY5-14110-000	CAMSHAFT COMP., IN.	1	
E-9	2	HPNA-14114-003	PLATE, TDC PULSE	1	
E-9	3	HPNA-14115-000	BOLT, SEALING, 14MM	2	
E-9	4	HZY6-14120-000	CAMSHAFT COMP., EX.	1	
E-9	5	HPNA-14210-000	SPROCKET, CAM CHAIN DRIVEN	1	(46T)
E-9	6	HZY6-14311-000	SPROCKET, CAM CHAIN DRIVEN IN.	1	(46T)
E-9	7	HR40-14401-A01	CHAIN(176L)(BORG WARNER)	1	
E-9	8	HZY6-14510-003	TENSIONER ASSY., CAM CHAIN	1	
E-9	9	HPNA-14511-003	STOPPER(TOOL)	1	
E-9	10	HPPA-14520-003	ARM COMP., CAM CHAIN TENSIONER	1	
E-9	11	HPPA-14530-003	GUIDE COMP., CAM CHAIN	1	
E-9	12	HRWC-14540-A02	GUIDE COMP. B, CAM CHAIN	1	
E-9	13	HRAA-14620-A00	ARM ASSY., ROCKER	4	
E-9	14	HRAA-14624-A00	ARM ASSY., EX. ROCKER	4	
E-9	15	HPNE-14631-000	SHAFT, IN. ROCKER	1	
E-9	16	HR40-14633-A00	SHAFT, EX. ROCKER	1	
E-9	17	HRAA-14647-A00	WASHER, THRUST	8	
E-9	18	HPNA-14711-000	VALVE, IN.	8	
E-9	19	HPRB-14721-A00	VALVE, EX.	8	
E-9	20	HPNA-14744-004	SCREW, TAPPET ADJUSTING	8	
E-9	21	HPT0-14744-004	SCREW, TAPPET ADJUSTING	8	
E-9	22	HZY6-14751-003	SPRING, IN. VALVE(PINK)	8	(NIPPON HATSUJO)
E-9	23	HPNA-14762-003	SPRING, EX. VALVE(GRAY)	8	(NIPPON HATSUJO)
E-9	24	HRAA-14765-A00	RETAINER, VALVE SPRING	16	
E-9	25	HPT0-14775-000	SEAT, VALVE SPRING	16	
E-9	26	HRGM-14781-A01	COTTER, VALVE(FUJI VALVE)	32	
E-9	27	HPNA-90003-000	BOLT, TENSIONER PIVOT	1	
E-9	28	HPNA-90032-000	BOLT, FLANGE, 12X47	1	
E-9	29	HPNA-90042-003	BOLT, FLANGE, 10X32	1	

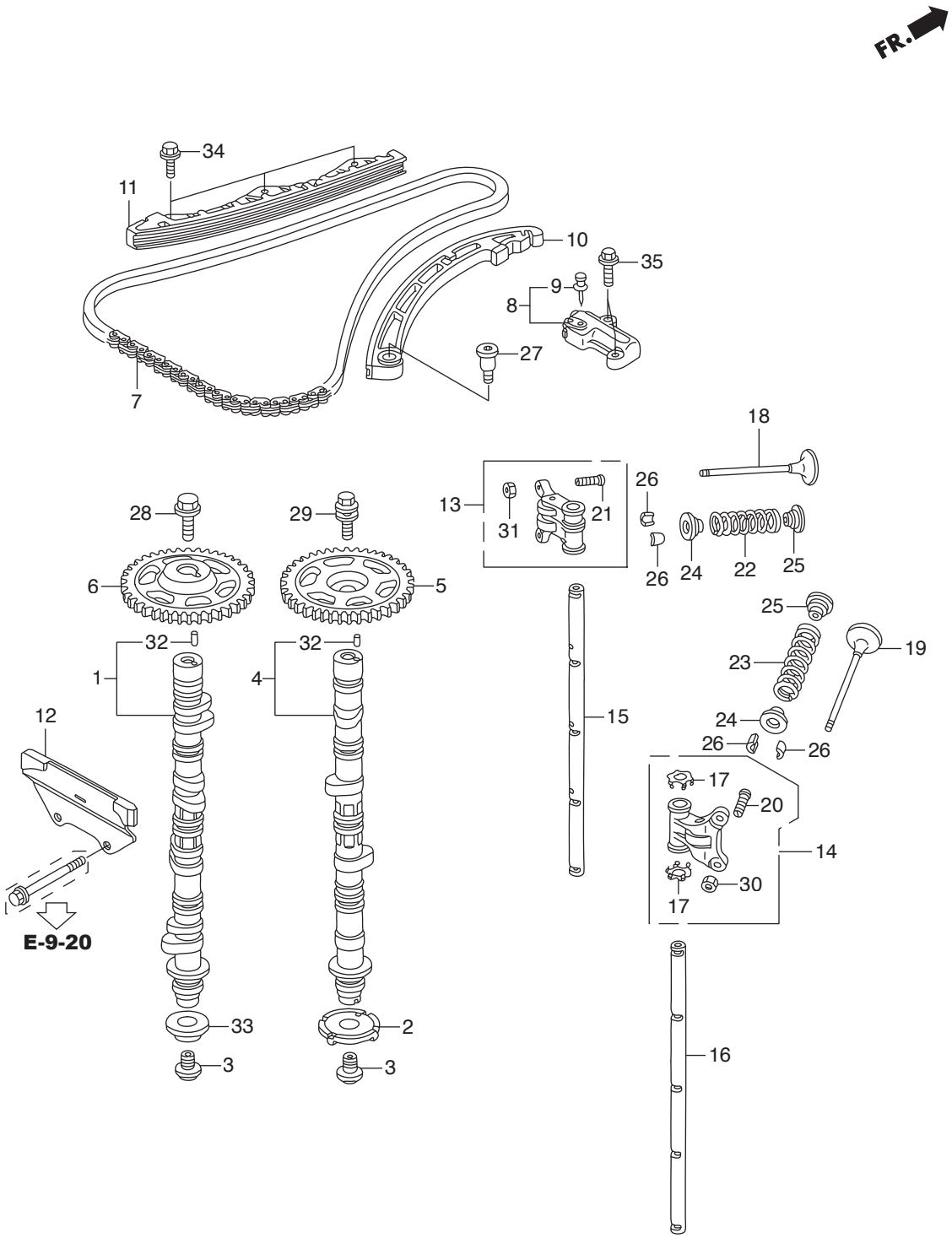
FR.
34
11
10
35
9
8
27
7
18
28
29
13
26
21
31
6
5
24
22
25
32
32
25
19
1
4
23
12
15
24
26
26
17
20
14
30
17
E-9-20
33
2
3
3
16

Ref.No.		Part No.	Description	Q'ty BFT115A	Remarks
E-9	30	HPM3-90206-004	NUT, TAPPET ADJUSTING	8	(TOKAI TRW)
E-9	31	HPT0-90206-004	NUT, TAPPET ADJUSTING	8	
E-9	32	HPNA-90703-300	DOWEL PIN, 4.2X10.3	2	
E-9	33	HZY6-91502-003	COLLAR, CAMSHAFT	1	
E-9	34	HCO-95701-06020-08	BOLT, FLANGE, 6X20	3	
E-9	35	HCO-95701-06030-08	BOLT, FLANGE, 6X30	2	

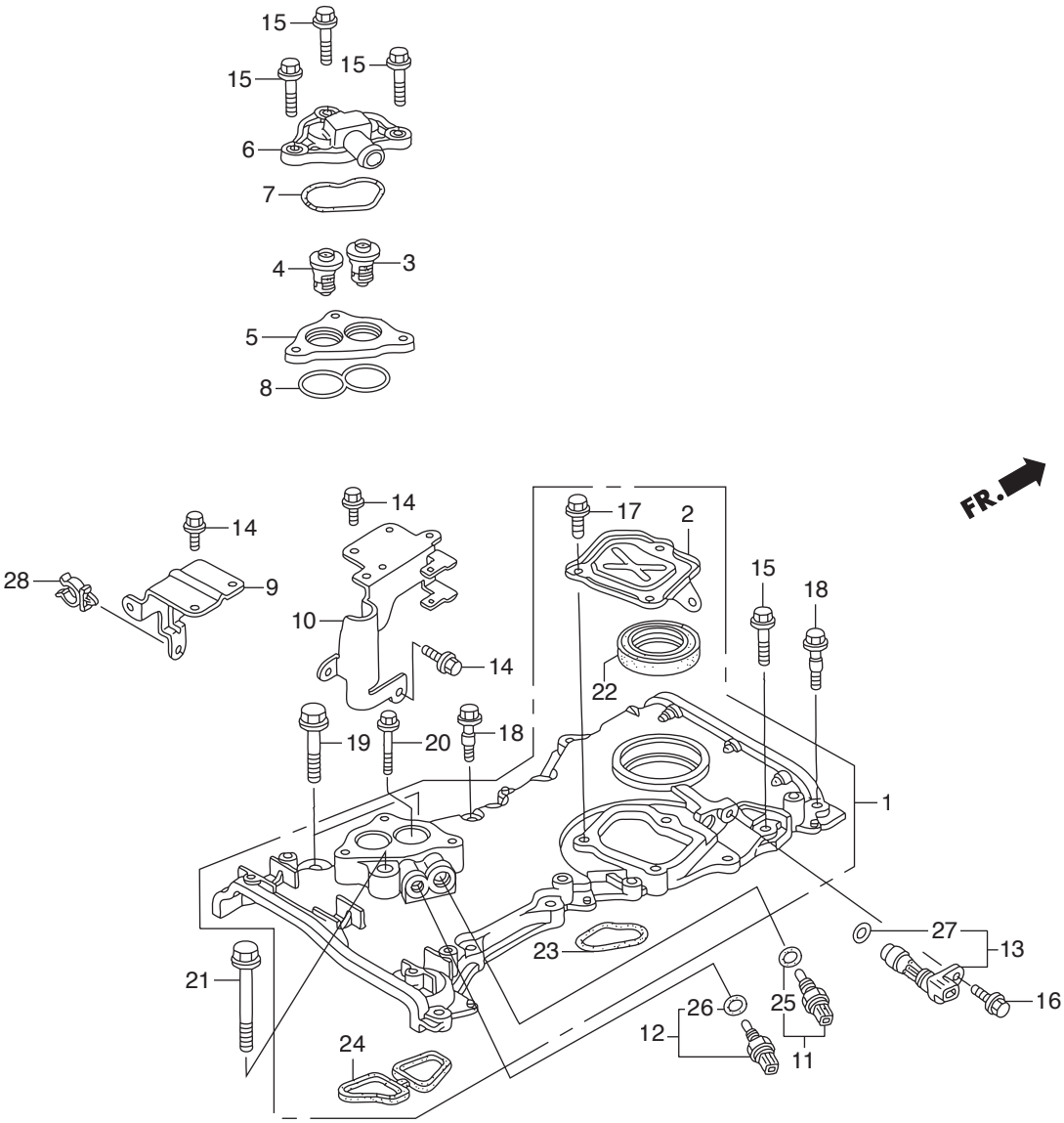
15
15
15
6
7
4
3
5
8
14
14
28
9
10
14
17
2
15
18
22
19
20
18
1
27
13
23
21
26
25
16
12
11
24
FR.

Ref.No.		Part No.	Description	Q'ty BFT115A	Remarks
E-9-10	1	HZY6-11410-425ZA	CASE ASSY., CHAIN	1	*NH8* DARK GRAY
E-9-10	2	HZY6-11412-000	COVER, CHAIN CASE	1	
E-9-10	3	HZY3-19300-023	THERMOSTAT ASSY.	1	
E-9-10	4	HZY6-19300-003	THERMOSTAT ASSY.	1	
E-9-10	5	HZY6-19313-000ZB	SPACER, THERMOSTAT COVER	1	*TGRAY* GRAY
E-9-10	6	HZY6-19315-010	COVER, THERMOSTAT	1	
E-9-10	7	HZY6-19318-010	PACKING, THERMOSTAT COVER	1	
E-9-10	8	HZY6-19319-000	PACKING, THERMOSTAT SPACER	1	
E-9-10	9	HZY6-32112-000	BRACKET B, HARNESS CLIP	1	
E-9-10	10	HZY6-32113-000	BRACKET C, HARNESS CLIP	1	
E-9-10	11	HZW5-35673-003	SENSOR ASSY., WATER	1	TEMPERATURE
E-9-10	12	HZY3-35673-003	SENSOR ASSY., WATER	1	TEMPERATURE
E-9-10	13	HPNB-37500-003	SENSOR ASSY., CRANK	1	
E-9-10	14	HZW9-90011-000	BOLT, FLANGE, 6X14(CT200)	5	
E-9-10	15	HZY3-90016-000	BOLT, FLANGE, 6X28	13	
E-9-10	16	HZY3-90017-000	BOLT, FLANGE, 6X16	1	
E-9-10	17	HZY3-90021-000	BOLT, FLANGE, 6X14	3	
E-9-10	18	HZY6-90023-000	BOLT, SPECIAL, 6X31	2	
E-9-10	19	HZY3-90040-000	BOLT, FLANGE, 10X43	2	
E-9-10	20	HZY6-90059-000	BOLT, FLANGE, 6X38	1	
E-9-10	21	HZW4-90162-000	BOLT, FLANGE, 10X70	1	
E-9-10	22	HPNC-91212-004	OIL SEAL, 43X58X7(ARAI)	1	
E-9-10	23	HPNA-91302-004	O-RING, CHAIN CASE	1	
E-9-10	24	HZY6-91304-010	PACKING, CHAIN CASE	1	
E-9-10	25	HPK2-91307-005	O-RING, 9.5X1.5(HONDA KIKAKI)	1	
E-9-10	26	HPNA-91307-003	O-RING, 9.5X1.9	1	
E-9-10	27	HPNA-91333-003	O-RING, 15X1.9	1	
E-9-10	28	HSP0-91546-A01	CLAMP, 18.5MM	1	

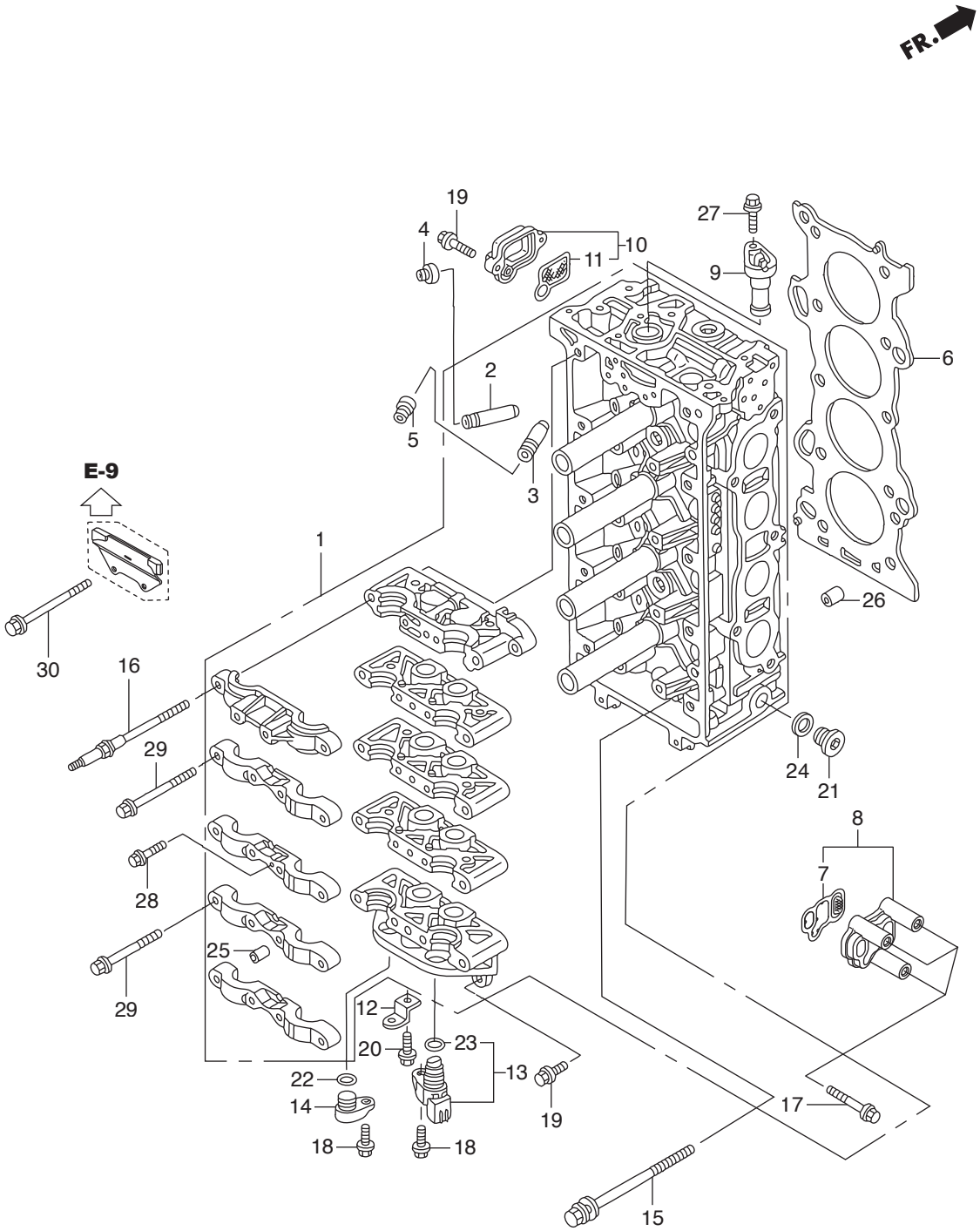
FR.
19
4
10
11
27
9
6
2
5
3
E-9
1
26
30
16
29
24
21
8
7
28
25
29
12
23
20
13
22
14
19
17
18
18
15

Ref.No.		Part No.	Description	Q'ty BFT115A	Remarks
E-9-20	1	HZY6-06122-010ZA	HEAD KIT, CYLINDER	1	*NH8* DARK GRAY
E-9-20	2	HPNA-12204-305	GUIDE, IN. VALVE(OS)	8	
E-9-20	3	HPNA-12205-305	GUIDE, EX. VALVE(OS)	8	
E-9-20	4	HPZ1-12210-003	SEAL A, VALVE STEM(ARAI)	8	
E-9-20		HPZ1-12210-004	SEAL A, VALVE STEM(NOK)	8	
E-9-20	5	HPZ1-12211-003	SEAL B, VALVE STEM(ARAI)	8	
E-9-20		HPZ1-12211-004	SEAL B, VALVE STEM(NOK)	8	
E-9-20	6	HZY6-12251-003	GASKET COMP., CYLINDER HEAD	1	
E-9-20	7	HRAA-15815-A02	FILTER ASSY., SPOOL VALVE	1	
E-9-20	8	HZY9-15815-000	COVER ASSY., OIL PATH	1	
E-9-20	9	HZY6-15834-000	PLUG, VTC HOLE	1	
E-9-20	10	HZY6-15840-000ZA	STRAINER ASSY., VTC	1	*NH8* DARK GRAY
E-9-20	11	HRAA-15845-A01	FILTER ASSY., VTC	1	
E-9-20	12	HZY6-32116-000	BRACKET F, CLIP	1	
E-9-20	13	HPNB-37510-003	SENSOR ASSY., TDC	1	
E-9-20	14	HZY6-37521-000	PLUG, TDC HOLE	1	
E-9-20	15	HPNA-90005-003	BOLT-WASHER, 11X155	10	
E-9-20	16	HPNA-90011-003	BOLT A, HEAD COVER	6	
E-9-20	17	HZY6-90011-000	BOLT, FLANGE, 6X52	3	
E-9-20	18	HZY3-90017-000	BOLT, FLANGE, 6X16	2	
E-9-20	19	HZW5-90018-000	BOLT, FLANGE, 6X20	4	
E-9-20	20	HZY3-90021-000	BOLT, FLANGE, 6X14	1	
E-9-20	21	HZY6-90048-010	BOLT, SEALING, 20MM	1	
E-9-20	22	HZY6-91303-003	O-RING, 15X1.9	1	
E-9-20	23	HPNA-91333-003	O-RING, 15X1.9	1	
E-9-20	24	HCO-94109-20000	WASHER, DRAIN PLUG, 20MM	1	
E-9-20	25	HCO-94301-10160	DOWEL PIN, 10X16	20	
E-9-20	26	HCO-94301-14200	DOWEL PIN, 14X20	2	
E-9-20	27	HCO-95701-06020-08	BOLT, FLANGE, 6X20	1	

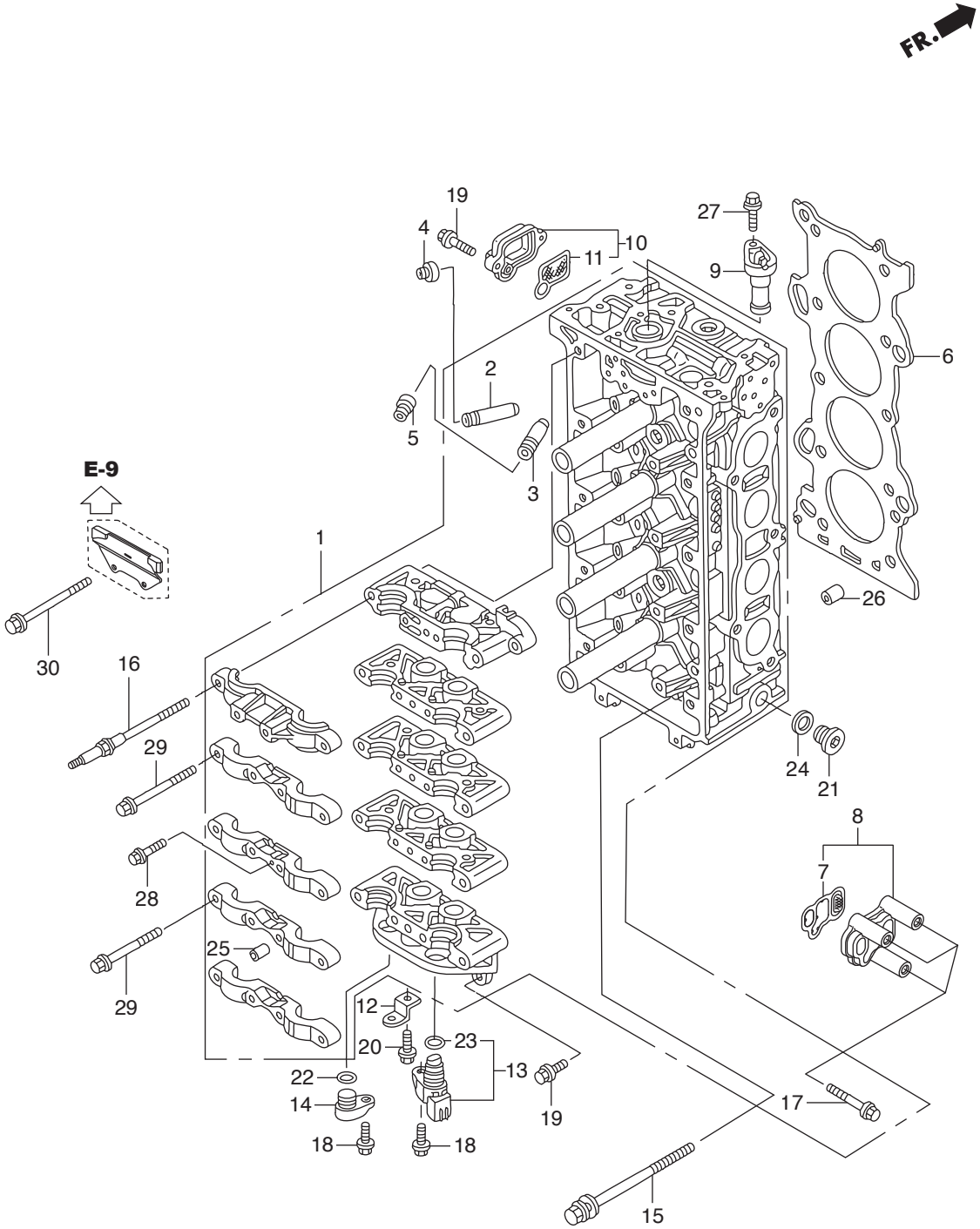
FR.
19
4
10
11
27
9
6
2
5
3
E-9
1
26
30
16
29
24
21
8
7
28
25
29
12
20
23
22
13
14
19
17
18
18
15

Ref.No.		Part No.	Description	Q'ty BFT115A	Remarks
E-9-20	28	HCO-95701-06032-08	BOLT, FLANGE, 6X32	1	
E-9-20	29	HCO-95701-08090-08	BOLT, FLANGE, 8X90	12	
E-9-20	30	HCO-95701-08110-08	BOLT, FLANGE, 8X110	2	

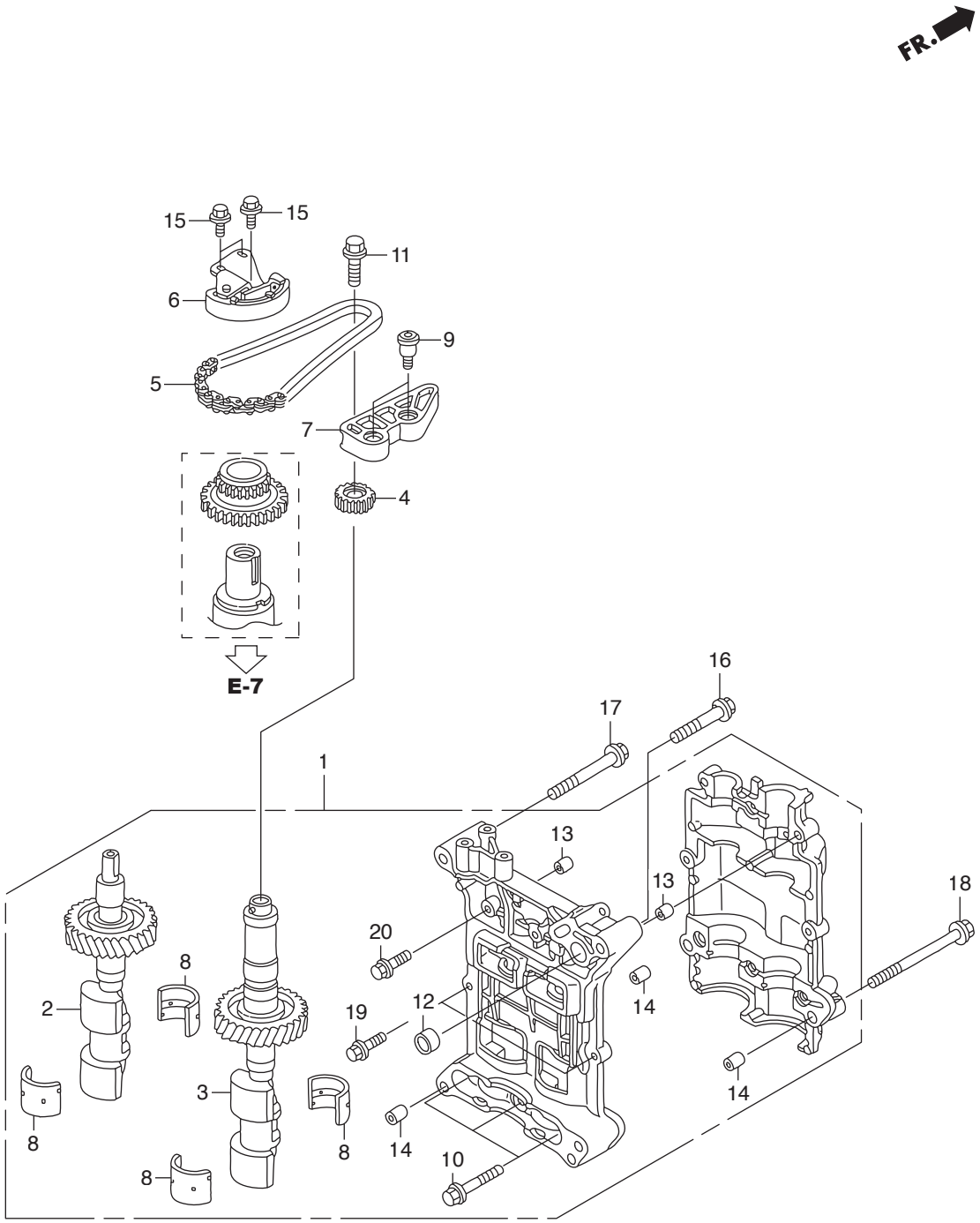
FR.
15
15
11
6
9
5
7
4
E-7
16
17
1
13
13
18
20
8
2
12
19
14
3
14
8
8
14
10
8

Ref.No.		Part No.	Description	Q'ty BFT115A	Remarks
E-10	1	HZY6-13400-000	CASE ASSY., BALANCER HOLDER	1	
E-10	2	HRAD-13410-010	SHAFT COMP., FR. BALANCER	1	
E-10	3	HRAD-13420-010	SHAFT COMP., RR. BALANCER	1	
E-10	4	HPNA-13432-000	SPROCKET, DRIVEN(17T)	1	
E-10	5	HPNA-13441-004	CHAIN(62L)	1	
E-10	6	HPNA-13450-004	TENSIONER COMP., BALANCER	1	SHAFT CHAIN
E-10	7	HPNA-13460-004	GUIDE COMP., BALANCER SHAFT	1	CHAIN
E-10	8	HR40-15115-A01	METAL, BALANCER SHAFT(DAIDO)	4	
E-10	9	HPNA-90004-000	BOLT, CHAIN GUIDE	2	
E-10	10	HZY6-90020-000	BOLT, FLANGE, 8X55	3	
E-10	11	HPNA-90031-004	BOLT-WASHER, 10X30	1	
E-10	12	HZY6-90701-000	DOWEL PIN, 18X13	1	
E-10	13	HCO-94301-08100	DOWEL PIN, 8X10	2	
E-10	14	HCO-94301-12160	PIN A, DOWEL, 12X16	3	
E-10	15	HCO-95701-06014-08	BOLT, FLANGE, 6X14	3	
E-10	16	HCO-95701-08050-08	BOLT, FLANGE, 8X50	1	
E-10	17	HCO-95701-08075-08	BOLT, FLANGE, 8X75	1	
E-10	18	HCO-95701-10105-08	BOLT, FLANGE, 10X105	2	
E-10	19	HCO-96300-06025-00	BOLT, FLANGE, 6X25	2	
E-10	20	HCO-96300-06032-00	BOLT, FLANGE, 6X32	3	

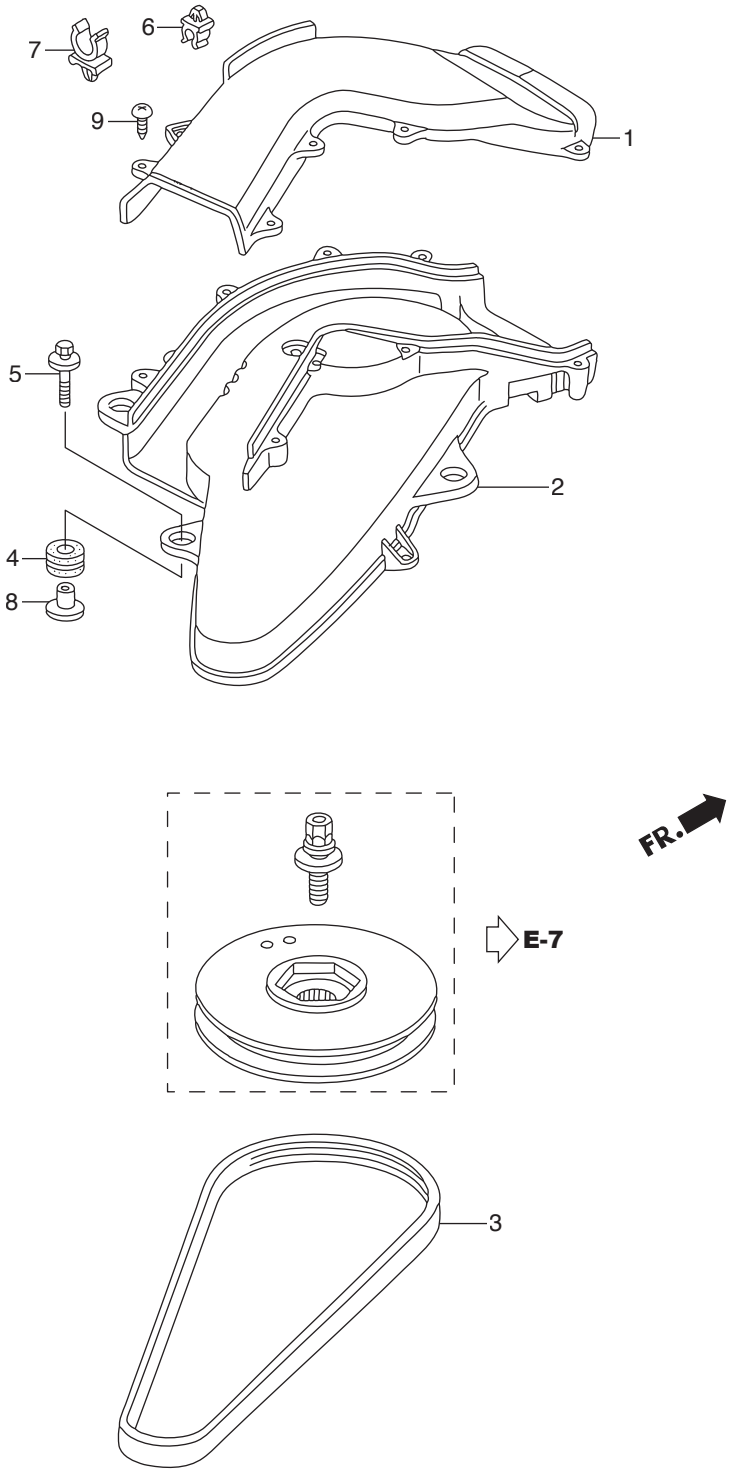
7
6
9
1
5
2
4
8
FR.
E-7
3

Ref.No.		Part No.	Description	Q'ty	Remarks
				BFT115A	
E-13	1	HZY6-17431-000	DUCT A, SILENCER	1	
E-13	2	HZY6-17432-000	DUCT B, SILENCER	1	
E-13	3	HZY6-31638-003	BELT, A.C. GENERATOR(4PK810)	1	
E-13	4	HZV5-40102-000	GROMMET, UNDER CASE	4	
E-13	5	HZW1-90013-000	BOLT-WASHER, 6X25	4	
E-13	6	HSZ5-91531-003	CLIP, TUBE, 3.5	2	
E-13	7	HSP0-91546-A01	CLAMP, 18.5MM	1	
E-13	8	HZV5-91553-010	COLLAR, C.D.I. UNIT CASE	4	
E-13	9	HCO-93903-254G0	SCREW, TAPPING, 5X20	8	

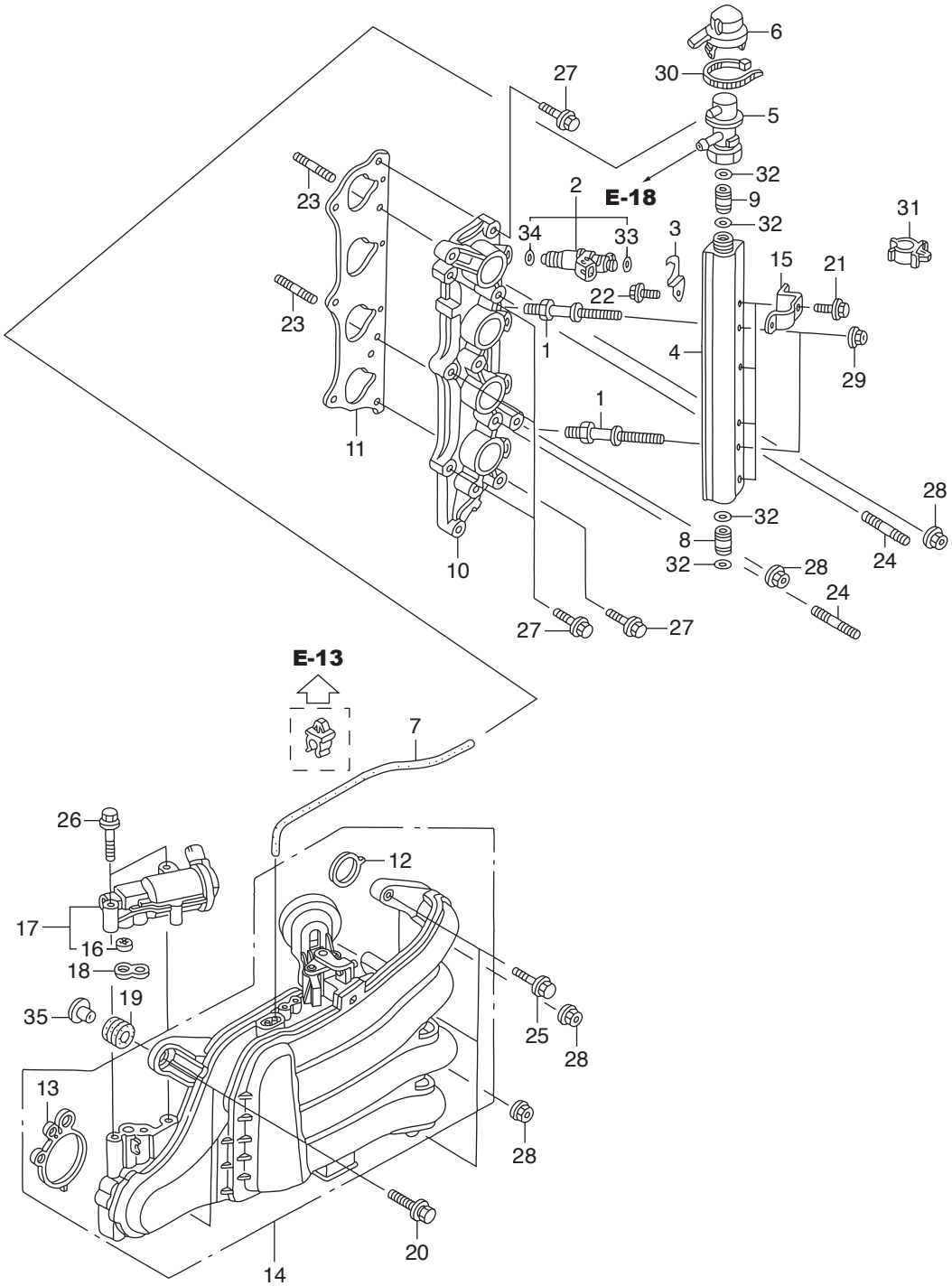
6
30
5
27
32
9
32
31
2
E-18
34
33
3
15
21
23
22
23
1
4
29
1
11
28
32
8
32
28
24
10
24
27
27
E-13
7
26
12
17
16
18
19
35
25
28
13
28
20
14
FR.

Ref.No.		Part No.	Description	Q'ty BFT115A	Remarks
E-14	1	HZY6-16089-000	BOLT, FUEL PIPE	2	
E-14	2	HZY6-16450-003	INJECTOR ASSY., FUEL	4	
E-14	3	HZY6-16451-000	CLIP, INJECTOR	4	
E-14	4	HZY6-16621-000	LINE, FUEL	1	
E-14	5	HZY6-16740-003	REGULATOR ASSY., PRESSURE	1	
E-14	6	HZY6-16744-010	CAP, REGULATOR	1	
E-14	7	HZY6-16748-000	TUBE, PRESSURE REGULATOR	1	CONTROL
E-14	8	HZY3-16752-000	JOINT, FUEL PIPE	1	
E-14	9	HZY6-16752-000	JOINT, FUEL PIPE	1	
E-14	10	HZY6-17051-000ZA	BASE, INJECTOR	1	*NH8* DARK GRAY
E-14	11	HPNA-17055-004	GASKET A, INJECTOR BASE	1	
E-14	12	HZY6-17105-000	PACKING, INTAKE MANIFOLD	4	
E-14	13	HZY6-17109-000	PACKING, THROTTLE BODY	1	
E-14	14	HZX1-17110-003	MANIFOLD COMP., INLET	1	
E-14	15	HZY6-32111-000	BRACKET A, HARNESS CLIP	4	
E-14	16	HPS4-36454-003	FILTER COMP., ELECTRONIC AIR	1	CONTROL VALVE(TOYO ROKI)
E-14	17	HZY6-36550-003	VALVE ASSY., ELECTRONIC AIR	1	CONTROL
E-14	18	HZY6-36551-003	PACKING, ELECTRONIC AIR	1	CONTROL VALVE
E-14	19	H121-51640-730	RUBBER, FR. CARRIER CUSHION	2	
E-14	20	HZW1-90014-000	BOLT-WASHER, 8X35	2	
E-14	21	HZY3-90021-000	BOLT, FLANGE, 6X14	4	
E-14	22	HZY3-90042-000	BOLT, FLANGE, 6X10	4	
E-14	23	HZY6-90043-000	BOLT, STUD 2, 8X25	2	
E-14	24	HZY6-90047-000	BOLT, STUD, 8X32	2	
E-14	25	HZY3-90054-000	BOLT, FLANGE, 8X35	3	
E-14	26	HZW4-90126-000	BOLT, FLANGE, 8X45	2	
E-14	27	HZW4-90151-000	BOLT, FLANGE, 8X25	5	
E-14	28	HZY3-90205-000	NUT, FLANGE, 8MM	4	
E-14	29	HZW2-90301-F00	NUT, FLANGE, 6MM	2	

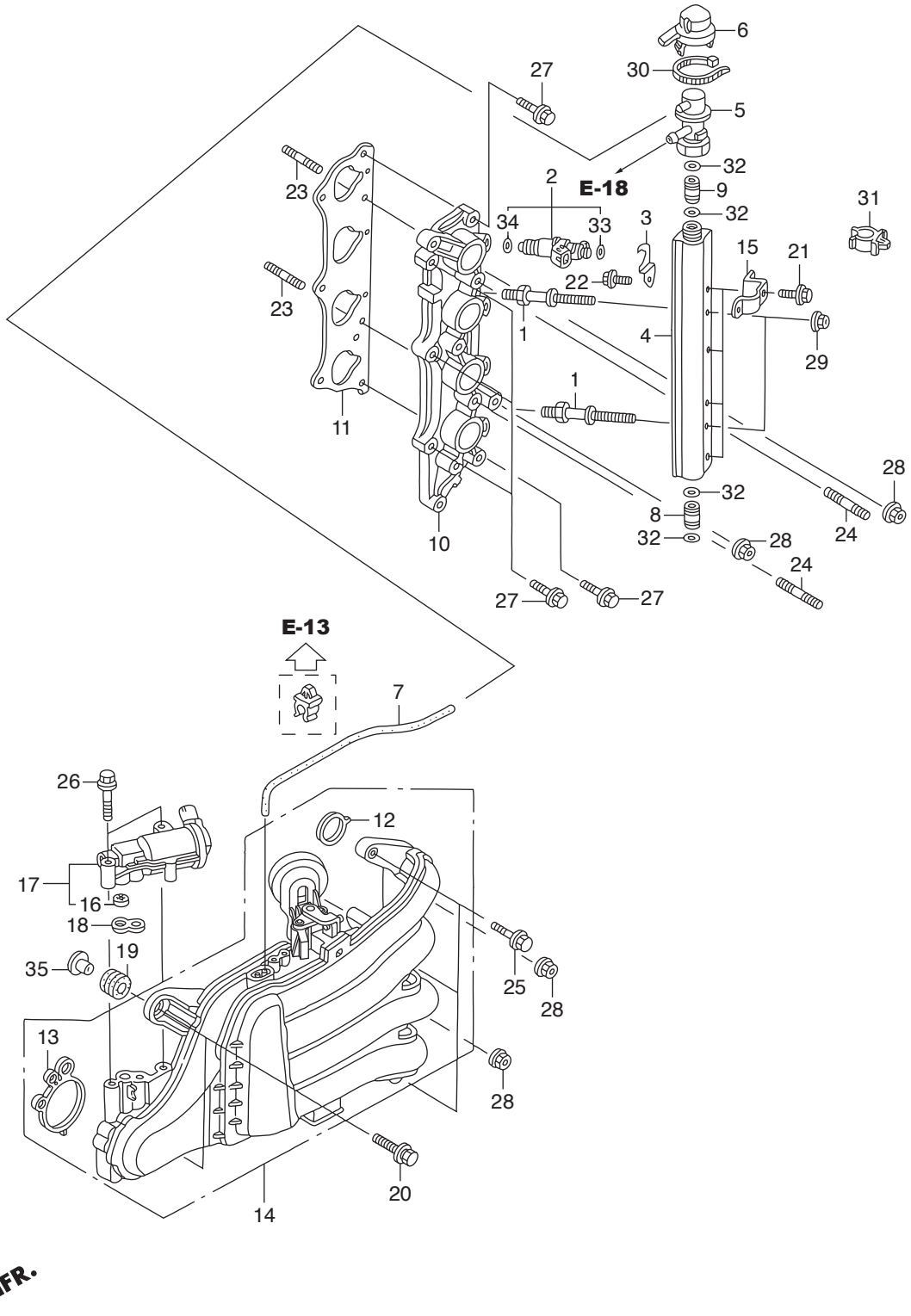
6
30
5
27
32
9
32
31
2
E-18
34
33
3
15
21
23
22
23
1
4
29
1
11
28
32
8
32
28
24
10
24
27
27
E-13
7
26
12
17
16
18
19
35
25
28
13
28
20
14
FR.

Ref.No.		Part No.	Description	Q'ty	Remarks
				BFT115A	
E-14	30	HGEV-90650-003	BAND, HARNESS	1	
E-14	31	HSB2-90687-003	CLIP, FUEL TUBE, 14	4	
E-14	32	HMJ0-91301-003	O-RING, 7.8X1.9(ARAI)	4	
E-14	33	HPLC-91301-000	O-RING, 7.47X3.6	4	
E-14	34	HPNA-91302-003	O-RING, 7.45X3.61(NOK)	4	
E-14	35	HZW1-91554-000	COLLAR, 8.5X14.5	2	

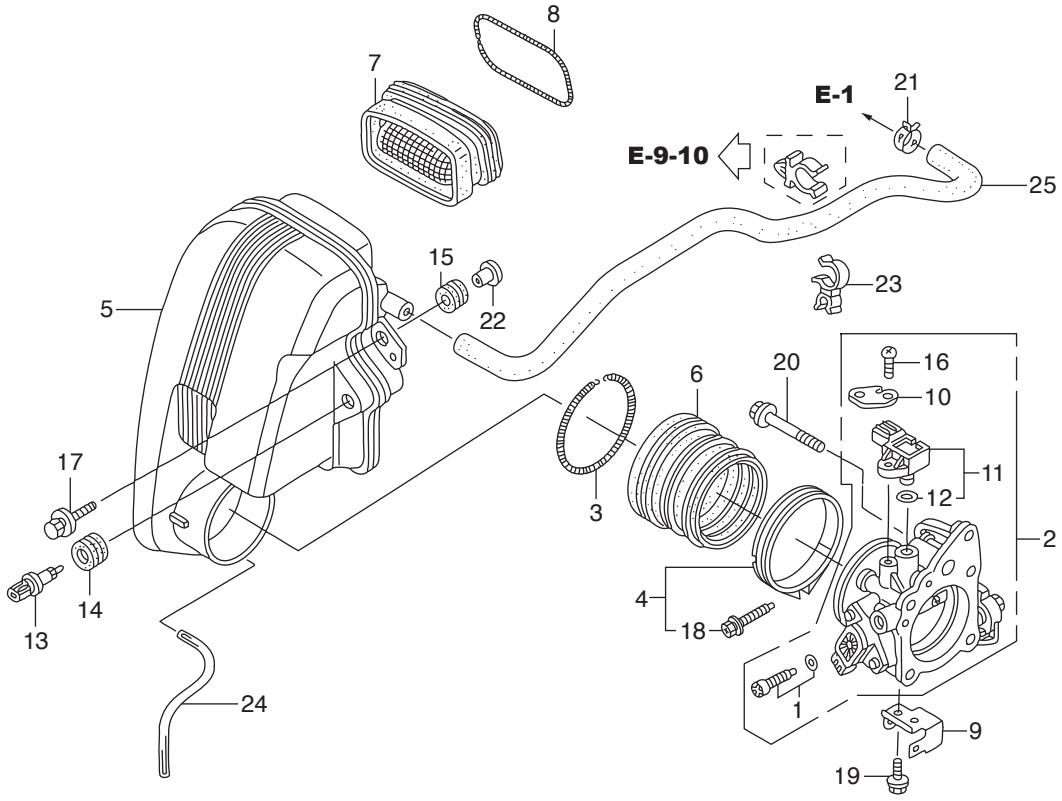
8
7
E-1
21
E-9-10
25
15
23
5
22
20
16
6
10
17
11
12
3
2
4
14
13
18
1
24
9
19

FR.

Ref.No.		Part No.	Description	Q'ty BFT115A	Remarks
E-15	1	HZY6-16016-003	SCREW SET	1	
E-15	2	HZY6-16400-013	THROTTLE BODY ASSY.	1	
E-15	3	HPY3-17249-000	SPRING, AIR FLOW TUBE	1	
E-15	4	HZY9-17315-000	BAND, AIR FLOW	1	
E-15	5	HZY6-17371-020	CASE COMP., SILENCER	1	
E-15	6	HZY6-17374-000	GROMMET, SILENCER	1	
E-15	7	HZY6-17397-013	GROMMET, SILENCER DUCT	1	
E-15	8	HZY6-17398-000	SPRING, SILENCER DUCT GROMMET	1	
E-15	9	HZY6-32115-000	BRACKET E, HARNESS CLIP	1	
E-15	10	HZY3-32128-000	BRACKET, SENSOR CORD	1	
E-15	11	HRNA-37830-A01	SENSOR ASSY., MAP	1	
E-15	12	HPGK-37835-A01	O-RING	1	
E-15	13	HPLC-37880-004	SENSOR ASSY., AIR TEMP	1	(MATSUSHITA DENSHI)
E-15	14	HP2A-37881-000	GROMMET, TA SENSOR	1	
E-15	15	HZV5-40102-000	GROMMET, UNDER CASE	3	
E-15	16	HZY6-90006-000	SCREW, PAN, 5X18	1	
E-15	17	HZW1-90013-000	BOLT-WASHER, 6X25	3	
E-15	18	HZY9-90017-000	BOLT-WASHER, 5X30	1	
E-15	19	HZY3-90056-000	BOLT, FLANGE, 6X12	1	
E-15	20	HZV1-90127-010	BOLT, FLANGE, 8X60	4	
E-15	21	HZV3-90601-030	CLAMP, TUBE(D17)	1	
E-15	22	HZV5-91553-010	COLLAR, C.D.I. UNIT CASE	3	
E-15	23	HSF1-91595-003	CLAMP, FUEL HOSE	1	
E-15	24	HCO-95003-07016-31	TUBE, VINYL, 4X7X160	1	(HC-95003-07001-60M)
E-15	25	HCO-95005-12740-20	TUBE, 12X740	1	(HC-95005-12001-20M)

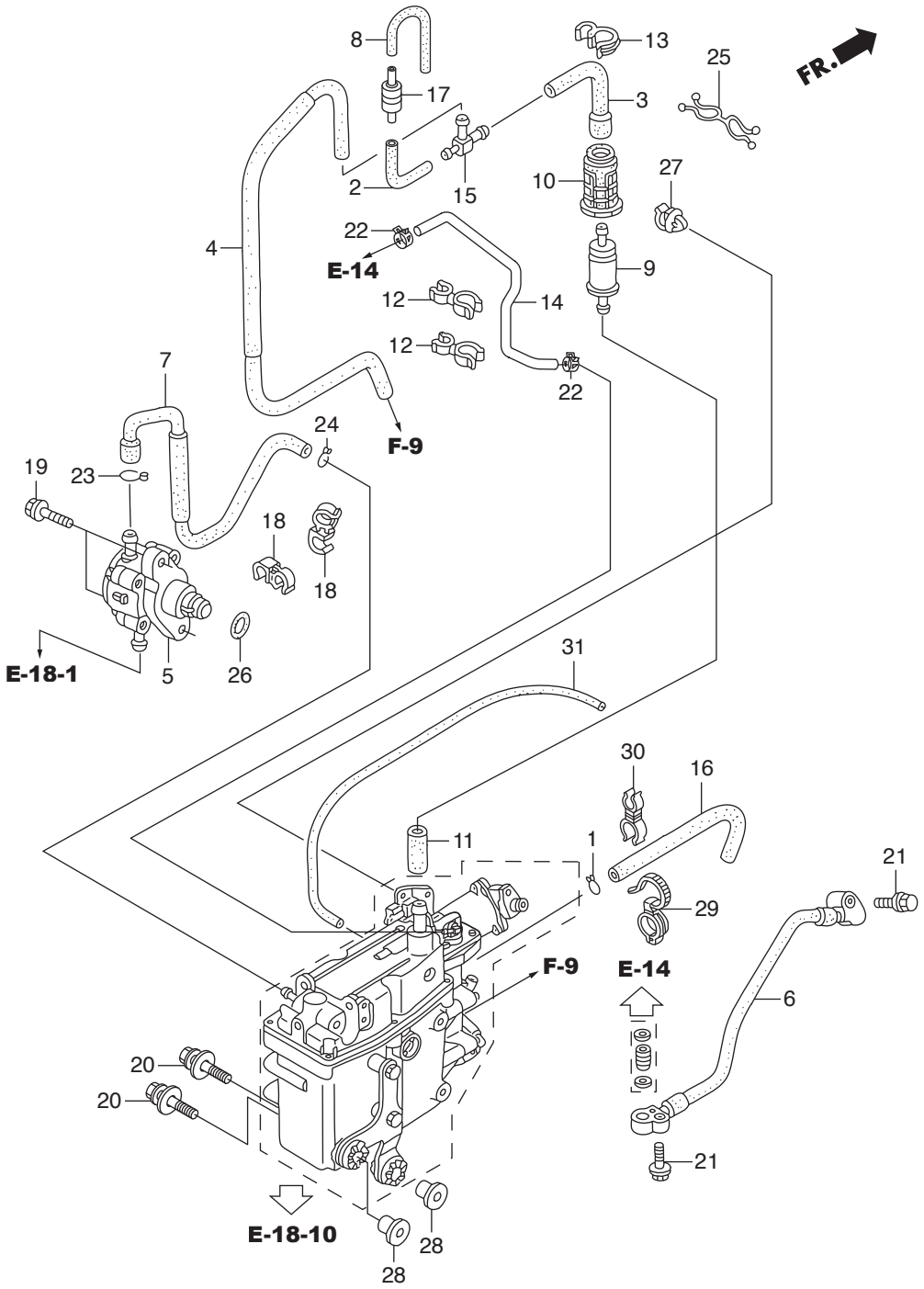
8
13
25
FR.
17
3
2
15
10
27
22
4
E-14
9
12
14
12
22
7
24
F-9
19
23
18
18
E-18-1
5
26
31
30
16
11
1
21
29
F-9
E-14
6
20
20
21
E-18-10
28
28

Ref.No.		Part No.	Description	Q'ty	Remarks
				BFT115A	
E-18	1	HGHB-16163-610	CLIP, TUBE	1	
E-18	2	HZY6-16196-000	TUBE COMP. C, AIR VENT	1	
E-18	3	HZY6-16198-000	TUBE B, AIR VENT	1	
E-18	4	HZY6-16199-000	TUBE COMP., AIR VENT	1	
E-18	5	HZY6-16700-013	PUMP ASSY., FUEL	1	
E-18	6	HZY6-16755-003	HOSE COMP., FUEL	1	
E-18	7	HZY6-16860-000	TUBE COMP. B, FUEL	1	
E-18	8	HZV5-16881-000	TUBE D, FUEL	1	
E-18	9	H759-16911-003	STRAINER, FUEL PUMP	1	
E-18	10	HZW5-16915-000	SUSPENSION, STRAINER	1	
E-18	11	HMZ5-16952-000	TUBE B, FUEL	1	
E-18	12	HVM0-16965-771	CLAMP, HOSE	2	
E-18	13	HKV7-17368-671	CLAMP, PIPE	1	
E-18	14	HZY6-17723-020	HOSE, PRESSURE REGULATOR	1	RETURN
E-18	15	HZY6-19269-000	T-JOINT	1	
E-18	16	HZY6-19273-000	TUBE G, WATER	1	
E-18	17	HZY6-36135-003	VALVE, CHECK	1	
E-18	18	HSE0-53740-953	CLIP, SENSOR HOSE	2	
E-18	19	HZY6-90010-000	BOLT, FLANGE, 6X27	2	
E-18	20	HZW1-90014-000	BOLT-WASHER, 8X35	2	
E-18	21	HZW9-90016-000	BOLT, FLANGE, 6X25	2	
E-18	22	HZW5-90601-030	CLAMP, TUBE(D10.7)	2	
E-18	23	HZY6-90601-000	CLIP, TUBE(B1 14.5)	1	
E-18	24	HZV0-90604-000	CLIP, TUBE(B12)	1	
E-18	25	HZY6-90605-003	CLIP, FUEL HOSE	1	
E-18	26	HPA9-91317-003	O-RING, 33.2X2.4(NOK)	1	
E-18	27	HSE0-91547-003	CLIP, HARNESS	1	
E-18	28	HZW1-91554-000	COLLAR, 8.5X14.5	2	
E-18	29	HSM4-91558-003	CLIP, TUBE(BLACK)(135MM)	1	

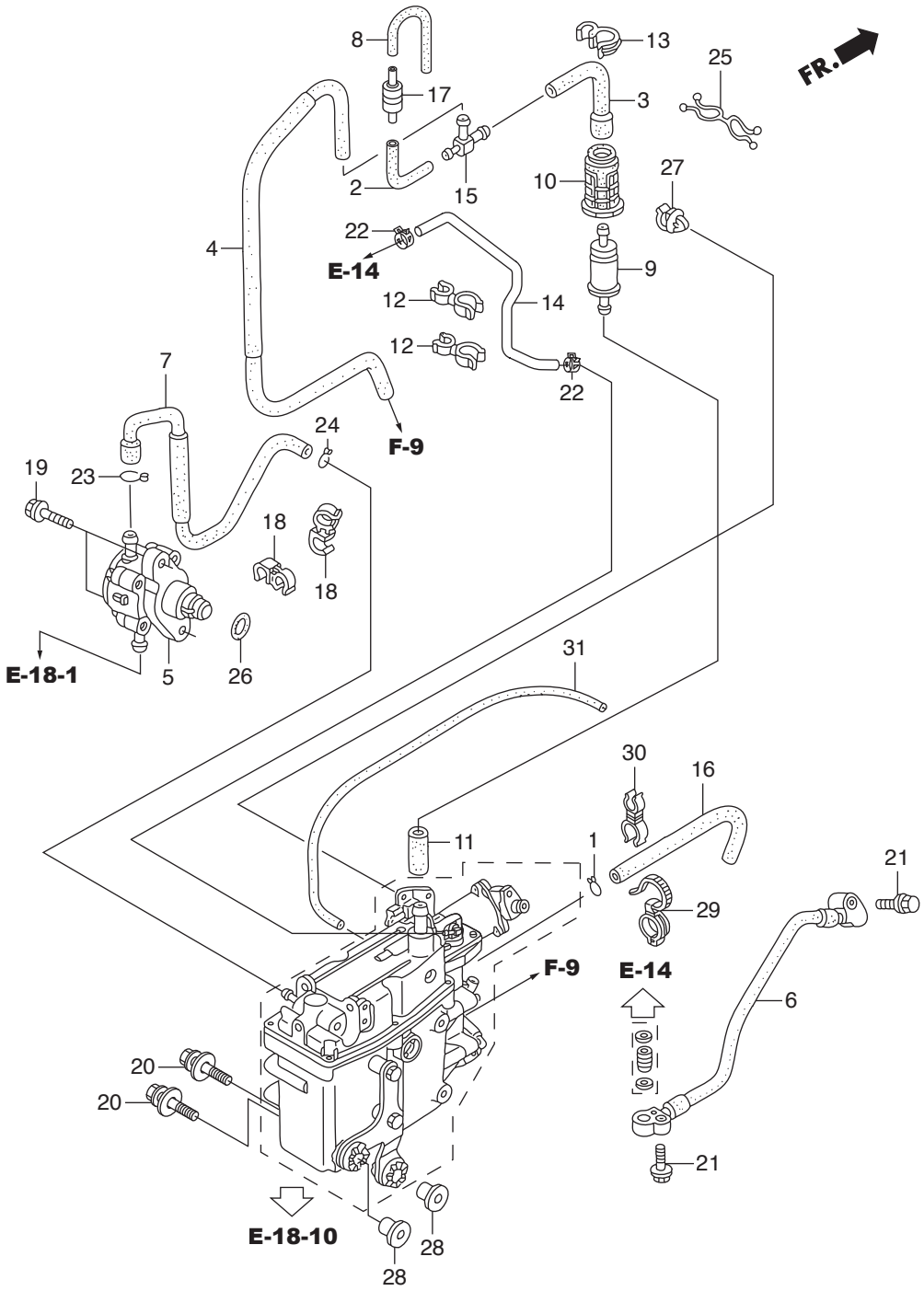
8
13
25
FR.
17
3
2
15
10
27
22
4
E-14
9
12
14
12
22
7
24
F-9
19
23
18
18
E-18-1
5
26
31
30
16
11
1
21
29
F-9
E-14
6
20
20
21
E-18-10
28
28

Ref.No.		Part No.	Description	Q'ty	Remarks
				BFT115A	
E-18	30	HSH3-91599-A32	CLAMP, PURGE HOSE	1	
E-18	31	HCO-95001-35430-40	TUBE, FUEL, 3.5X430	1	(HC-95001-35001-60M)

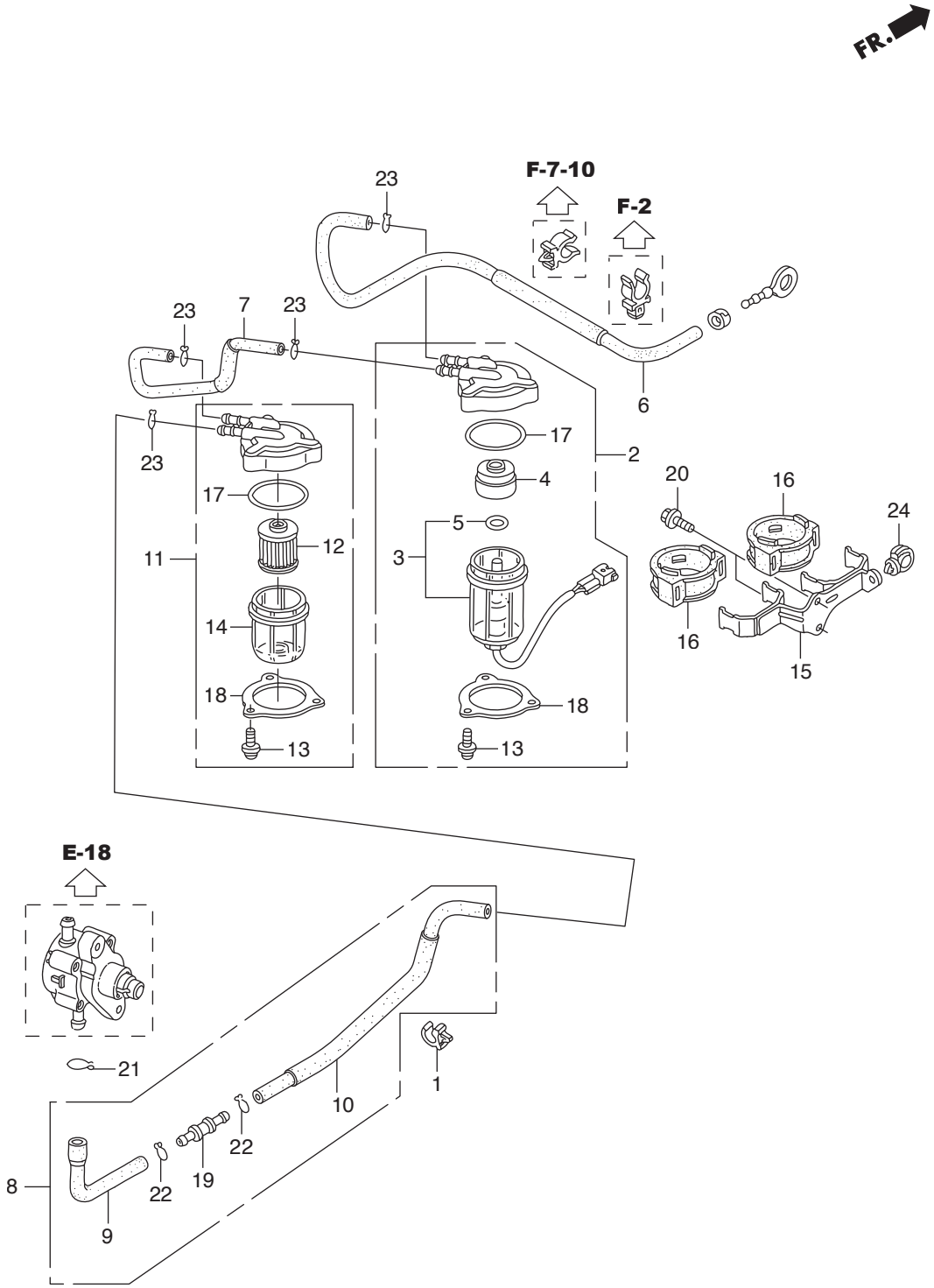
FR.
F-7-10
F-2
E-18
23
7
23
23
23
6
17
2
4
20
16
24
17
5
12
11
3
14
16
15
18
18
13
13
21
1
10
22
19
22
8
9

Ref.No.		Part No.	Description	Q'ty	Remarks
				BFT115A	
E-18-1	1	HZE2-16731-003	CLIP, TUBE	1	
E-18-1	2	HZY6-16800-003	SEPARATOR ASSY., WATER	1	
E-18-1	3	HZY6-16805-003	CUP SET, WATER SEPARATOR	1	
E-18-1	4	HZY3-16807-003	BUFFER, PLATE	1	
E-18-1	5	HZY3-16818-003	O-RING	1	
E-18-1	6	HZY6-16850-000	TUBE COMP. A, FUEL	1	
E-18-1	7	HZY6-16871-000	TUBE C, FUEL	1	
E-18-1	8	HZY6-16880-030	TUBE ASSY. D, FUEL	1	
E-18-1	9	HZY6-16881-000	TUBE D, FUEL	1	
E-18-1	10	HZY6-16890-000	TUBE COMP. E, FUEL	1	
E-18-1	11	HZY3-16900-003	STRAINER COMP., FUEL	1	
E-18-1	12	HZY3-16901-003	STRAINER, FUEL	1	
E-18-1	13	HZY3-16904-003	SCREW, PAN, 5X12	6	
E-18-1	14	HZY3-16912-003	CUP, FUEL STRAINER	1	
E-18-1	15	HZY6-16914-010	STAY, FUEL STRAINER	1	
E-18-1	16	HZY3-16915-010	SUSPENSION, STRAINER	2	
E-18-1	17	HZY3-16918-003	O-RING	2	
E-18-1	18	HZY3-16919-003	PLATE	2	
E-18-1	19	HMR5-16966-000	JOINT, FUEL TUBE	1	
E-18-1	20	HZY3-90021-000	BOLT, FLANGE, 6X14	2	
E-18-1	21	HZY6-90601-000	CLIP, TUBE(B1 14.5)	1	
E-18-1	22	HZW5-90602-030	CLAMP, TUBE(D12)	2	
E-18-1	23	HZV0-90604-000	CLIP, TUBE(B12)	4	
E-18-1	24	HSA0-90683-003	CLIP, WIRE HARNESS, 25MM	1	

E-18-10 VAPOR SEPARATOR ASSY

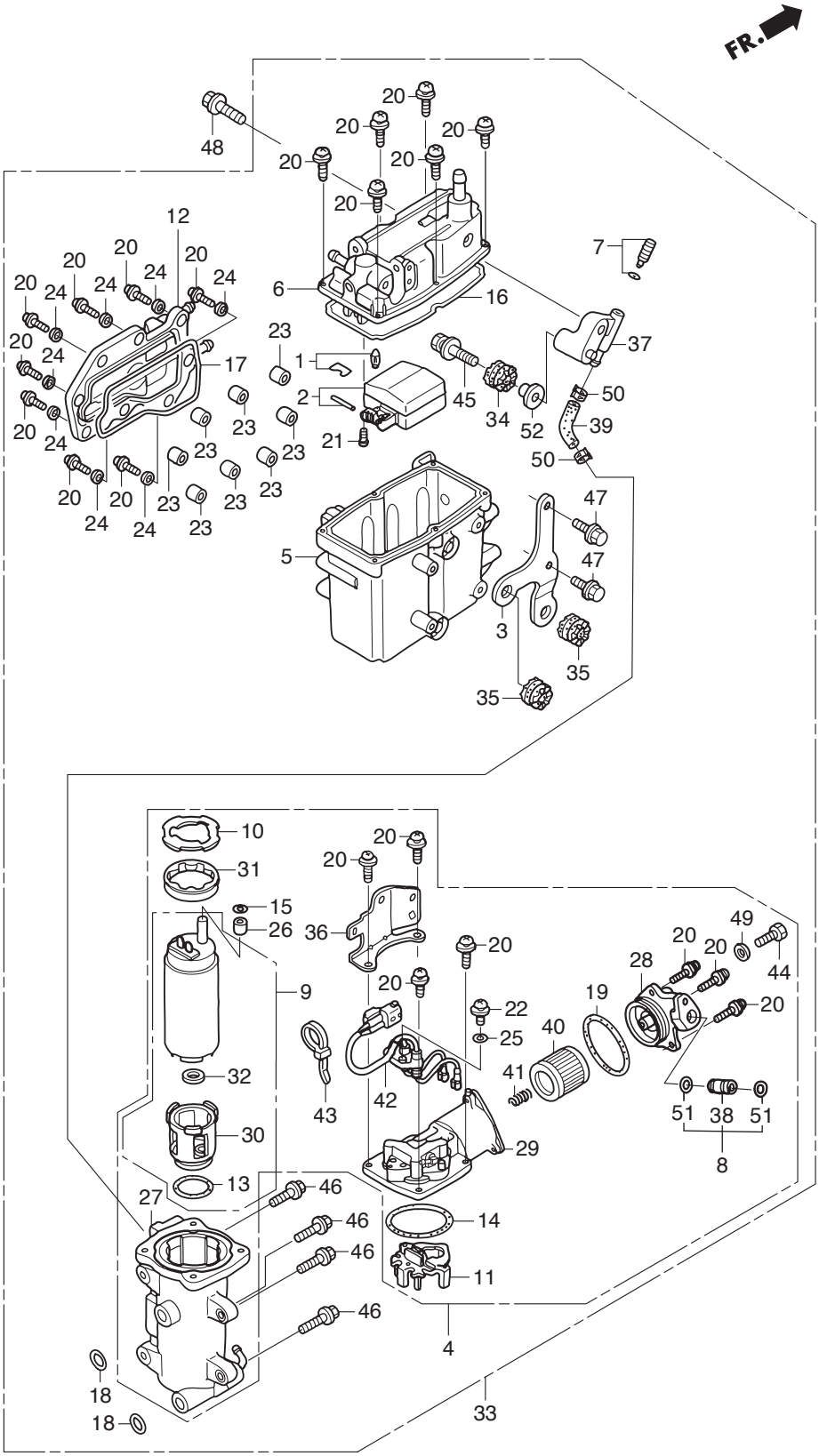

Ref.No.		Part No.	Description	Q'ty	Remarks
				BFT115A	
E-18-10	1	HZY3-16011-000	VALVE SET, FLOAT	1	
E-18-10	2	HZY3-16013-000	FLOAT SET	1	
E-18-10	3	HZY6-16014-003	STAY A, PLATE	1	
E-18-10	4	HZY6-16017-043	PUMP UNIT, FUEL	1	
E-18-10	5	HZY6-16019-003	BODY COMP., CHAMBER	1	
E-18-10	6	HZY6-16020-023	COVER COMP.	1	
E-18-10	7	HZY3-16024-000	SCREW SET, DRAIN	1	
E-18-10	8	HZY3-16026-000	JOINT SET	1	
E-18-10	9	HZY6-16036-003	PUMP UNIT, FUEL(B)	1	
E-18-10	10	HZY3-16041-000	PLATE	1	
E-18-10	11	HZY3-16042-000	HOLDER	1	
E-18-10	12	HZY3-16061-000	COVER, WATER JACKET	1	
E-18-10	13	HZY3-16072-000	O-RING	1	
E-18-10	14	HZY3-16073-000	O-RING	1	
E-18-10	15	HZY3-16074-000	O-RING	1	
E-18-10	16	HZY3-16075-000	O-RING	1	
E-18-10	17	HZY3-16076-000	O-RING	1	
E-18-10	18	HZY3-16077-000	O-RING	2	
E-18-10	19	HZY3-16078-000	O-RING	1	
E-18-10	20	HZW5-16081-010	SCREW-WASHER	21	
E-18-10	21	HZY3-16082-000	SCREW, PAN	2	
E-18-10	22	HZY3-16083-000	SCREW, WASHER	1	
E-18-10	23	HZW5-16086-000	COLLAR	8	
E-18-10	24	HZW5-16087-000	WASHER, PLAIN	8	
E-18-10	25	HZY3-16087-000	WASHER, PLAIN	1	
E-18-10	26	HZY3-16088-000	COLLAR	1	
E-18-10	27	HZY6-16701-003	CASE COMP., PUMP	1	
E-18-10	28	HZW5-16708-003	COVER, PUMP(B)	1	
E-18-10	29	HZW5-16715-023	COVER, PUMP(A)	1	

E-18-10 VAPOR SEPARATOR ASSY

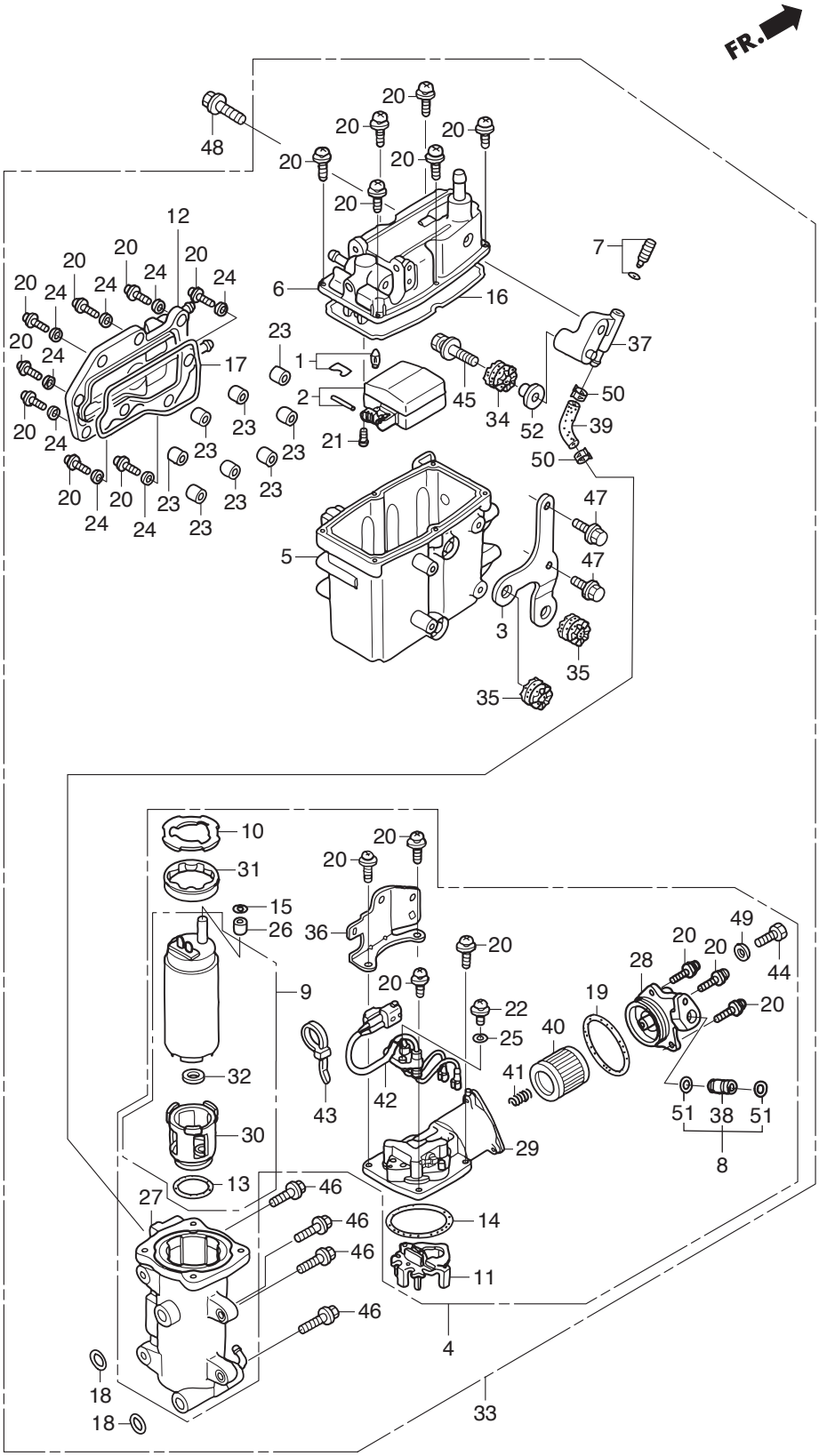

Ref.No.		Part No.	Description	Q'ty BFT115A	Remarks
E-18-10	30	HZY6-16718-013	INSULATOR COMP.	1	
E-18-10	31	HZY3-16721-000	INSULATOR	1	
E-18-10	32	HZY6-16723-003	RING	1	
E-18-10	33	HZY6-16730-063	SEPARATOR ASSY., VAPOR	1	
E-18-10	34	HZW5-16733-000	GROMMET, VAPOR SEPARATOR	1	
E-18-10	35	HZY3-16733-000	GROMMET, VAPOR SEPARATOR	2	
E-18-10	36	HZY6-16734-003	STAY, PLATE	1	
E-18-10	37	HZY6-16736-003	STAY, VAPOR SEPARATOR	1	
E-18-10	38	HZY3-16752-000	JOINT, FUEL PIPE	1	
E-18-10	39	HZY6-16840-A00	TUBE F, FUEL	1	
E-18-10	40	HZY3-16911-010	SCREEN COMP., FUEL STRAINER	1	
E-18-10	41	HZY3-16913-000	SPRING, SET	1	
E-18-10	42	HZY6-32166-003	HARNESS COMP.	1	
E-18-10	43	HZW5-32168-003	BAND	1	
E-18-10	44	HPP4-90009-E01	BOLT, SEALING, 6MM	1	
E-18-10	45	HZW1-90014-000	BOLT-WASHER, 8X35	1	
E-18-10	46	HZW9-90016-000	BOLT, FLANGE, 6X25	4	
E-18-10	47	HZY3-90017-000	BOLT, FLANGE, 6X16	2	
E-18-10	48	HZY3-90049-000	BOLT, FLANGE, 8X30	1	
E-18-10	49	HPD6-90430-003	WASHER, SEALING, 6MM	1	
E-18-10	50	HZY6-90607-000	CLAMP, TUBE(8.0)	2	
E-18-10	51	HMJ0-91301-003	O-RING, 7.8X1.9(ARAI)	2	
E-18-10	52	HZW1-91554-000	COLLAR, 8.5X14.5	1	

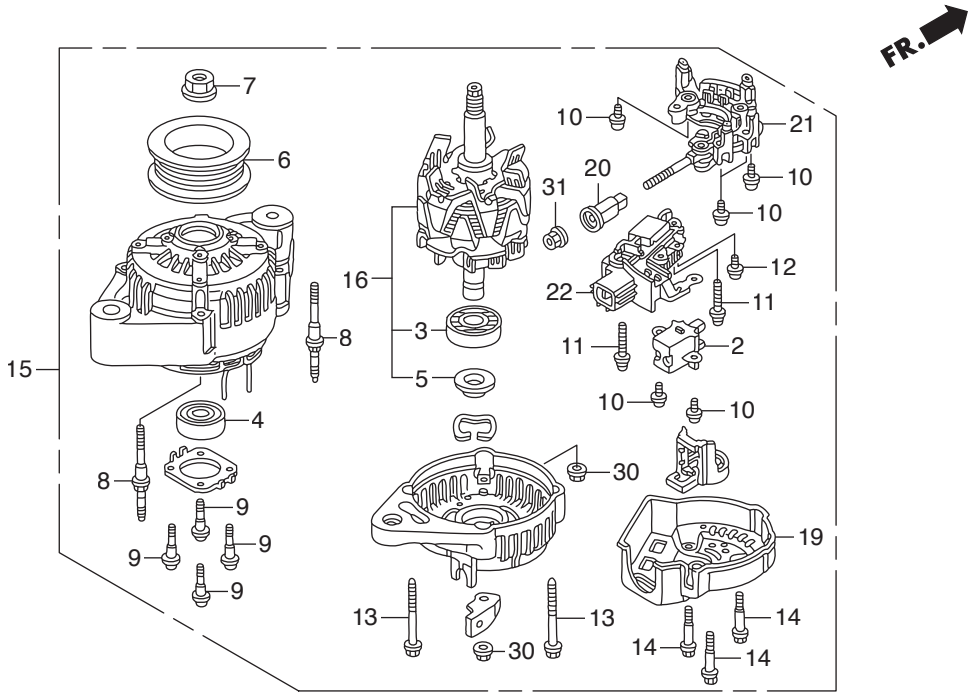
FR.
7
6
15
8
4
8
9
9
9
9
16
3
5
10
21
20
31
10
10
12
22
11
11
2
10
10
30
19
13
13
30
14
14
14

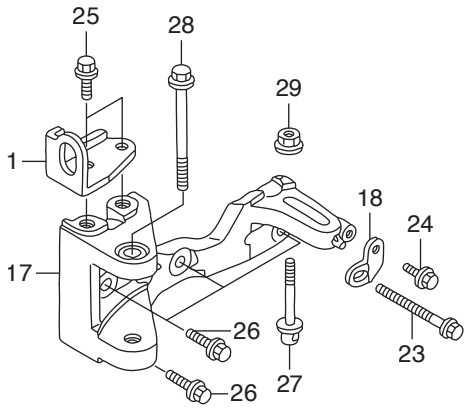
25
28
29
1
18
24
17
26
23
27
26

Ref.No.		Part No.	Description	Q'ty	Remarks
				BFT115A	
E-19	1	HZY6-11912-000	HANGER B, ENGINE	1	
E-19	2	HPZ1-31105-003	HOLDER ASSY., BRUSH	1	
E-19	3	HPJ7-31111-013	BEARING, RR.	1	
E-19	4	HPJ7-31114-013	BEARING, FR.	1	
E-19	5	HPD1-31138-004	COVER, BEARING	1	
E-19	6	HP64-31141-003	PULLEY	1	
E-19	7	HPD1-31142-004	NUT, PULLEY LOCK	1	
E-19	8	HPE9-31145-941	BOLT, STUD	2	
E-19	9	HPJ7-31146-003	SCREW	4	
E-19	10	HPT0-31147-003	SCREW-WASHER	6	
E-19	11	HPD1-31148-004	SCREW-WASHER, 4X25	2	
E-19	12	HPZ1-31149-003	SCREW	1	
E-19	13	HPE9-31152-942	BOLT-WASHER	2	
E-19	14	HPZ1-31153-003	BOLT	3	
E-19	15	HZY6-31630-003	GENERATOR ASSY., A.C.	1	
E-19	16	HZW5-31631-003	ROTOR ASSY.	1	
E-19	17	HZY6-31636-010	BRACKET COMP., A.C. GENERATOR	1	
E-19	18	HZY6-31637-000	STAY, A.C. GENERATOR	1	
E-19	19	HZW5-31639-003	END COVER, RR.	1	
E-19	20	HZW5-31644-003	BUSH, INSULATION	1	
E-19	21	HZW5-31710-003	RECTIFIER ASSY.	1	
E-19	22	HZY6-31750-003	REGULATOR ASSY.	1	
E-19	23	HZW5-90011-010	BOLT, SPECIAL ADJUSTER	1	
E-19	24	HZY3-90017-000	BOLT, FLANGE, 6X16	1	
E-19	25	HZY3-90026-000	BOLT, FLANGE, 8X20	2	
E-19	26	HZY3-90035-000	BOLT, FLANGE, 8X28	4	
E-19	27	HZY3-90055-000	BOLT, TENSIONER	1	
E-19	28	HZW4-90163-000	BOLT, FLANGE, 10X80	1	
E-19	29	HZW5-90203-010	NUT, FLANGE, 8MM	1	

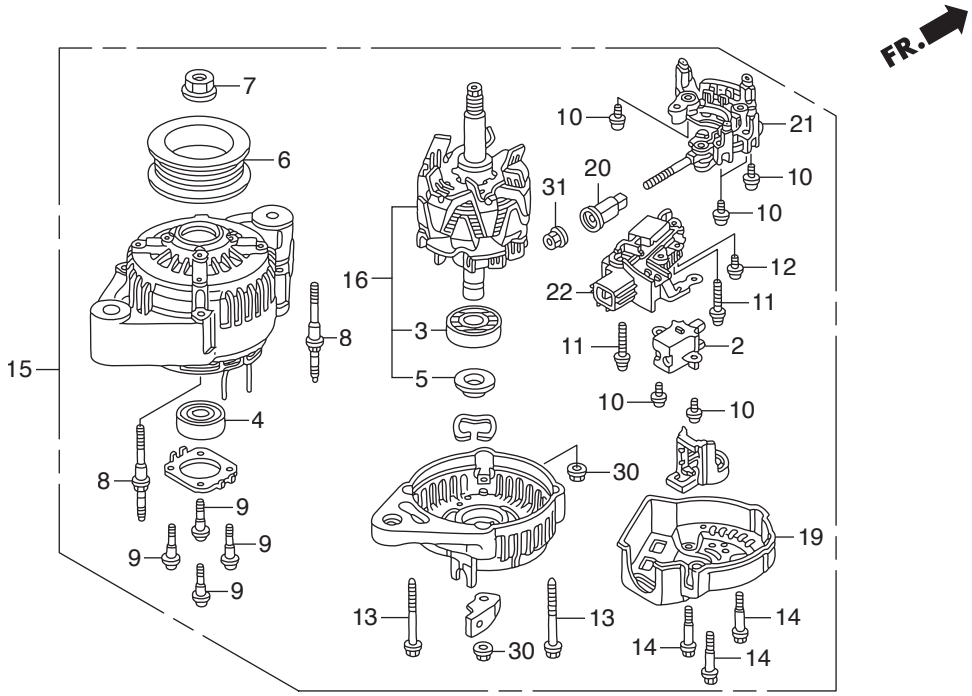
FR.
7
6
15
8
4
8
9
9
9
9
16
3
5
10
21
10
10
20
31
12
22
11
11
2
10
10
30
19
13
13
30
14
14
14

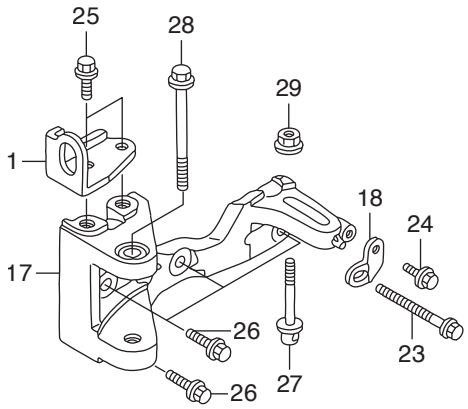
25
28
29
1
18
24
17
26
23
27
26

Ref.No.		Part No.	Description	Q'ty	Remarks
				BFT115A	
E-19	30	HPD1-90231-014	NUT-WASHER, 5MM	2	
E-19	31	HCO-94001-06080-0S	NUT, HEX., 6MM	1	

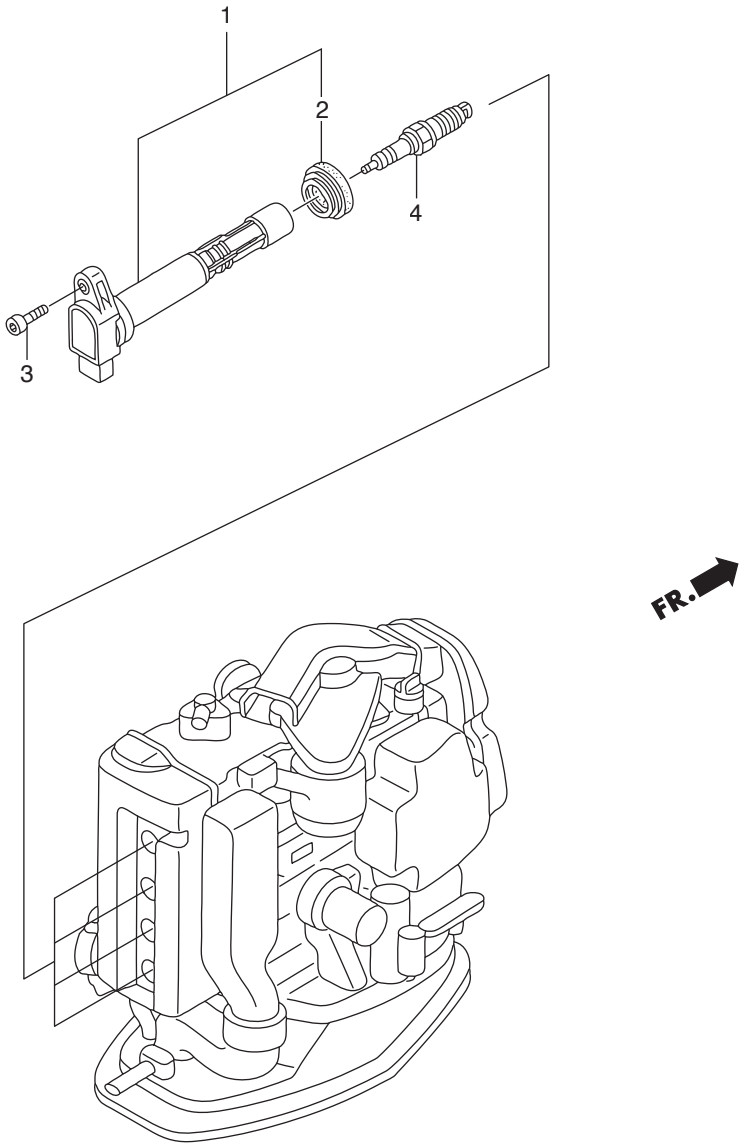
1
2
3
4
FR.

Ref.No.		Part No.	Description	Q'ty BFT115A	Remarks
E-20	1	HRRA-30520-007	COIL COMP., PLUG HOLE	4	
E-20	2	HPFB-30522-007	SEAL, PLUG HOLE	4	
E-20	3	HZY3-90084-000	BOLT, SOCKET, 6X25	4	
E-20	4	HCO-9807B-5615P	PLUG, SPARK(KJ20DR-M11)	4	(DENSO)
E-20		HCO-9807B-5615W	PLUG, SPARK(SKJ20DR-M11)	4	(DENSO)
E-20		HCO-9807B-5617P	PLUG, SPARK(ZFR6K-11)	4	(NGK)
E-20		HCO-9807B-5617W	PLUG, SPARK(IZFR6K-11)	4	(NGK)

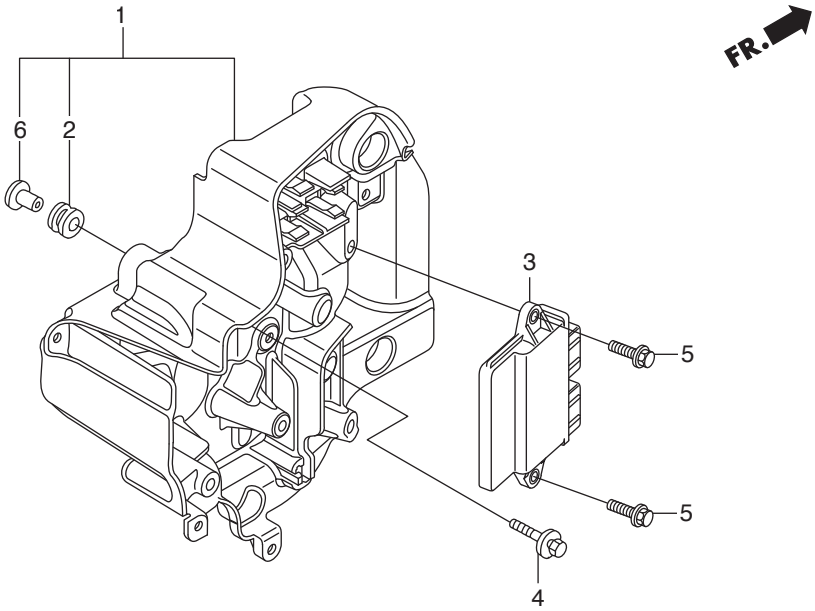
1
6
2
3
5
5
4
FR.

Ref.No.		Part No.	Description	Q'ty BFT115A	Remarks
E-20-10	1	HZY6-30410-000	CASE ASSY., ELECTRONIC PARTS	1	
E-20-10	2	HZY9-30419-003	GROMMET, ELECTRONIC PARTS CASE	4	
E-20-10	3	HZX1-34750-023	CONTROL UNIT, ELECTRONIC	1	
E-20-10	4	HZW2-90003-000	BOLT-WASHER, 6X27(CT200)	4	
E-20-10	5	HZW5-90018-000	BOLT, FLANGE, 6X20	2	
E-20-10	6	HZV5-91553-010	COLLAR, C.D.I. UNIT CASE	4	

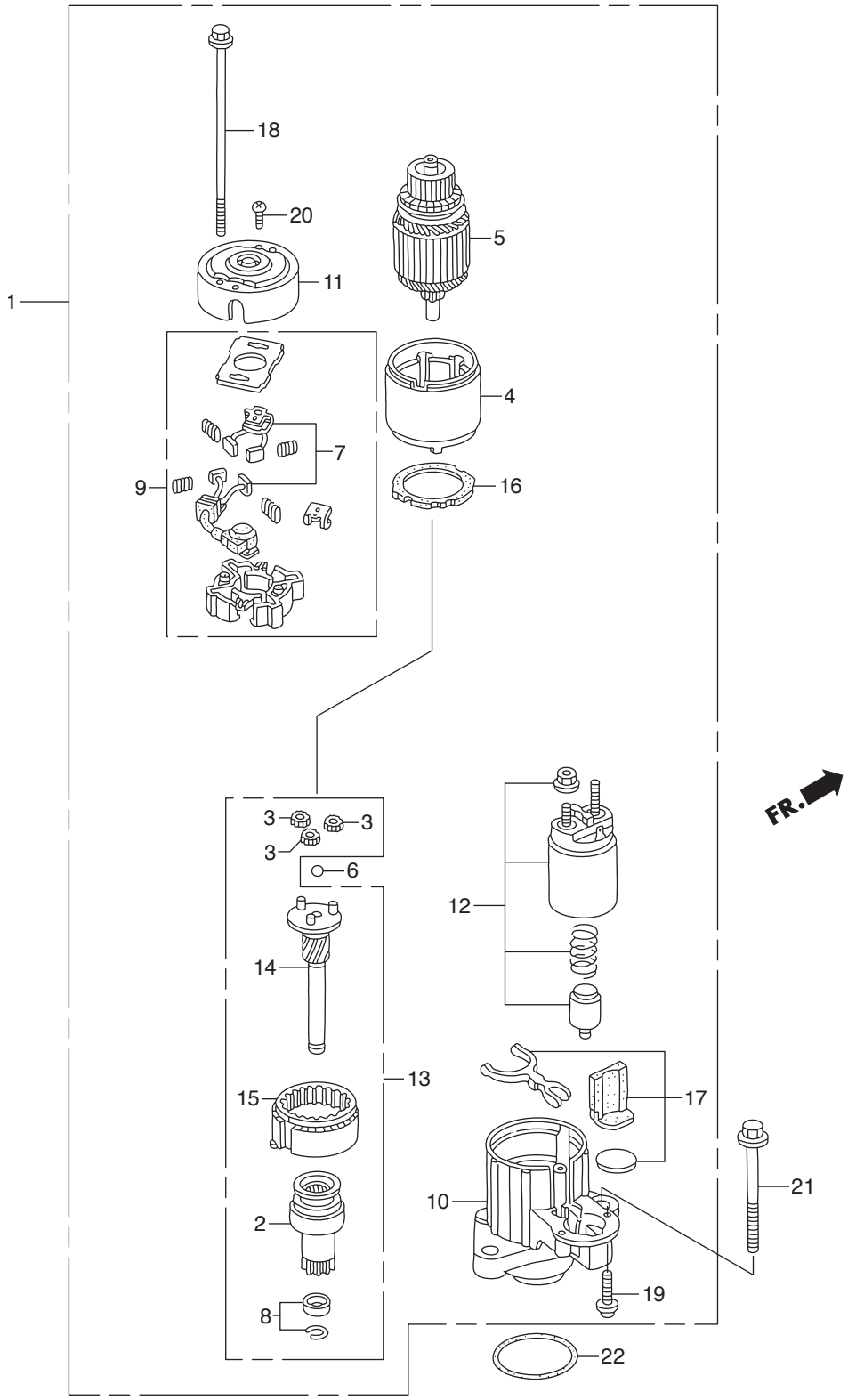
18
20
5
11
1
4
7
9
16
3
3
3
6
12
14
13
15
17
21
10
2
19
8
22
FR.

Ref.No.		Part No.	Description	Q'ty	Remarks
				BFT115A	
E-21	1	HZY6-31200-003	MOTOR ASSY., STARTER	1	
E-21	2	HZY3-31207-003	CLUTCH COMP., OVERRUNNING	1	
E-21	3	HPY3-31215-004	GEAR ASSY., PLANETARY	3	
E-21	4	HZY6-31216-003	YOKE COMP.	1	
E-21	5	HZW5-31217-003	ROTOR COMP.	1	
E-21	6	HPY3-31218-004	BALL, STEEL	1	
E-21	7	HZY6-31226-003	BRUSH SET	1	
E-21	8	HZW1-31229-004	STOPPER SET, SLEEVE	1	
E-21	9	HZY6-31231-003	HOLDER COMP., BRUSH	1	
E-21	10	HZY6-31235-003	BRACKET, FR.	1	
E-21	11	HZY6-31236-003	BRACKET, RR.	1	
E-21	12	HZY6-31240-003	SWITCH ASSY., MAGNET	1	
E-21	13	HZY6-31242-003	SHAFT ASSY., CLUTCH	1	
E-21	14	HZY3-31246-003	SHAFT ASSY., GEAR	1	
E-21	15	HZW1-31247-004	GEAR ASSY., INTERNAL	1	
E-21	16	HZW1-31249-004	PACKING	1	
E-21	17	HZW1-31250-004	LEVER SET	1	
E-21	18	HZW1-31261-004	BOLT A, THROUGH	2	
E-21	19	HZW1-90106-004	SCREW, PAN, 6X22(SPECIAL)	2	
E-21	20	HZW1-90107-004	SCREW, PAN, 5X8	2	
E-21	21	HZW4-90164-000	BOLT, FLANGE, 10X90	2	
E-21	22	HZY3-91303-000	O-RING, 59.4X3.1	1	

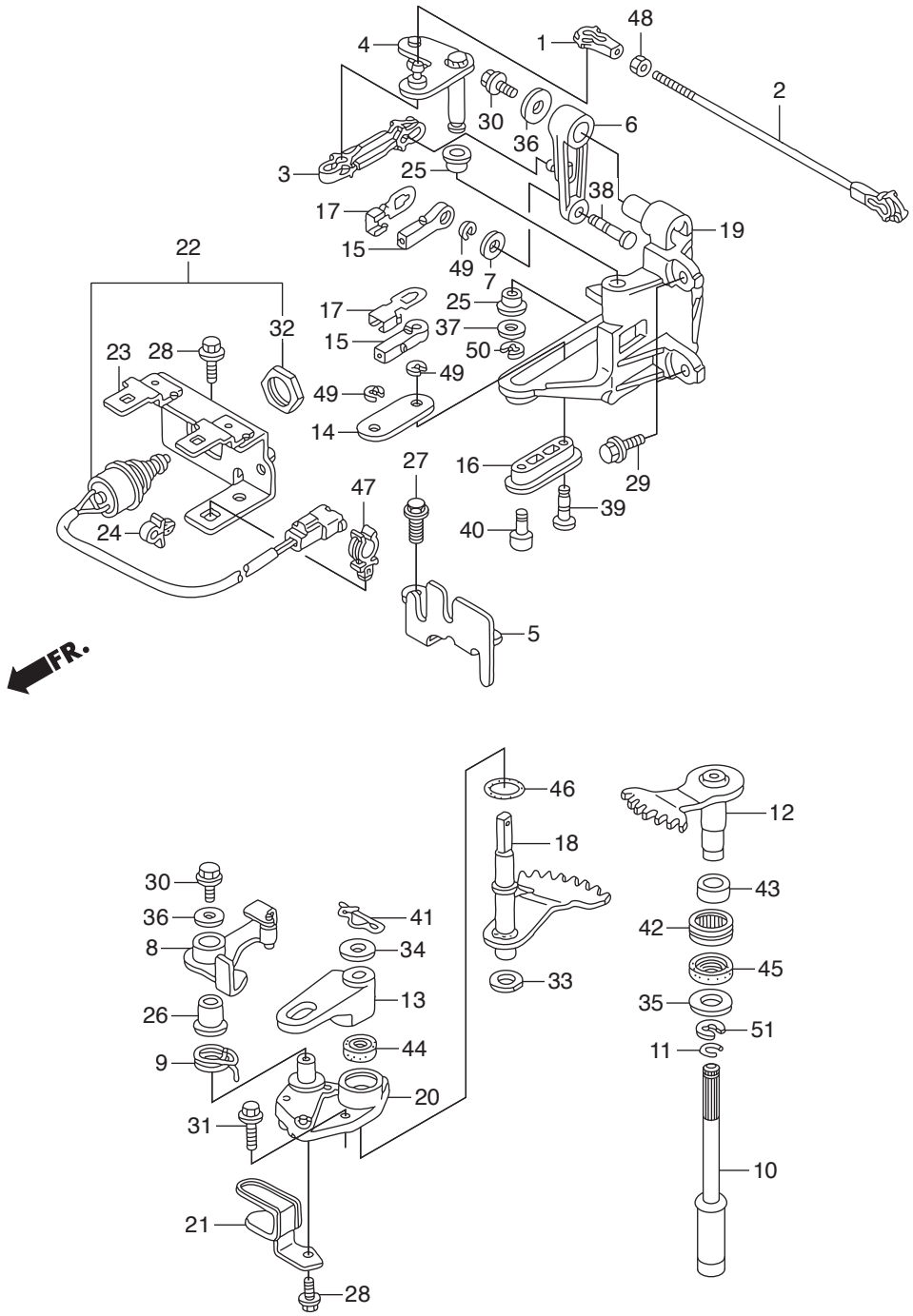
48
1
4
2
30
36
6
3
25
38
17
19
15
49
7
22
17
25
32
37
15
50
23
28
49
49
14
27
16
29
47
39
24
40
5
FR.
46
12
18
30
43
36
41
42
8
34
45
33
13
26
35
51
44
11
9
20
31
10
21
28

Ref.No.		Part No.	Description	Q'ty	Remarks
				BFT115A	
F-2	1	HZV5-17838-000	LINKAGE, PIVOT	1	
F-2	2	HZY6-17840-000	ROD COMP., THROTTLE	1	
F-2	3	HZY6-17845-000	LINK, THROTTLE	1	
F-2	4	HZY6-17860-000	PLATE COMP., THROTTLE	1	
F-2	5	HZY6-17877-010	PLATE, REMOTE CONTROL CABLE	1	
F-2	6	HZY6-17931-000	ARM, THROTTLE	1	
F-2	7	H921-17936-000	WASHER, PIVOT	1	
F-2	8	HZY6-24166-000	ARM COMP., CLICK	1	
F-2	9	HZY6-24218-000	SPRING, CLICK	1	
F-2	10	HZY6-24320-000	ROD COMP. A, SHIFT(L)	1	LD,LU
F-2		HZY6-24320-610	ROD COMP. A, SHIFT(XL)	1	XU
F-2	11	HZW1-24327-000	RING, STOPPER	1	
F-2	12	HZY6-24610-000	SHAFT COMP. A, SHIFT	1	
F-2	13	HZY6-24612-020	ARM, SHIFT	1	
F-2	14	HZY6-24614-000	PLATE, SHIFT PIVOT	1	
F-2	15	HZY3-24618-000	PIVOT, SHIFT	2	
F-2	16	HZY6-24618-000	PIVOT, SHIFT SLIDE	1	
F-2	17	HZY3-24619-000	PLATE, LOCK	2	
F-2	18	HZY6-24620-000	SHAFT COMP. B, SHIFT	1	
F-2	19	HZY6-24628-000	BRACKET, SHIFT LINK	1	
F-2	20	HZY6-24629-000ZA	HOLDER, SEAL	1	*NH8* DARK GRAY
F-2	21	HZY6-32418-000	BRACKET A, CABLE	1	
F-2	22	HZY3-35470-023	SWITCH ASSY., NEUTRAL	1	
F-2	23	HZY6-35475-000	BRACKET, NEUTRAL SWITCH	1	
F-2	24	HVM0-46391-003	CLIP, BRAKE PIPE(A)	1	
F-2	25	HZY3-63205-000	BUSH A, COVER LOCK	2	
F-2	26	H763-75538-C01	BUSH, BLADE BRAKE	1	
F-2	27	HZY3-90017-000	BOLT, FLANGE, 6X16	1	
F-2	28	HZY3-90021-000	BOLT, FLANGE, 6X14	2	

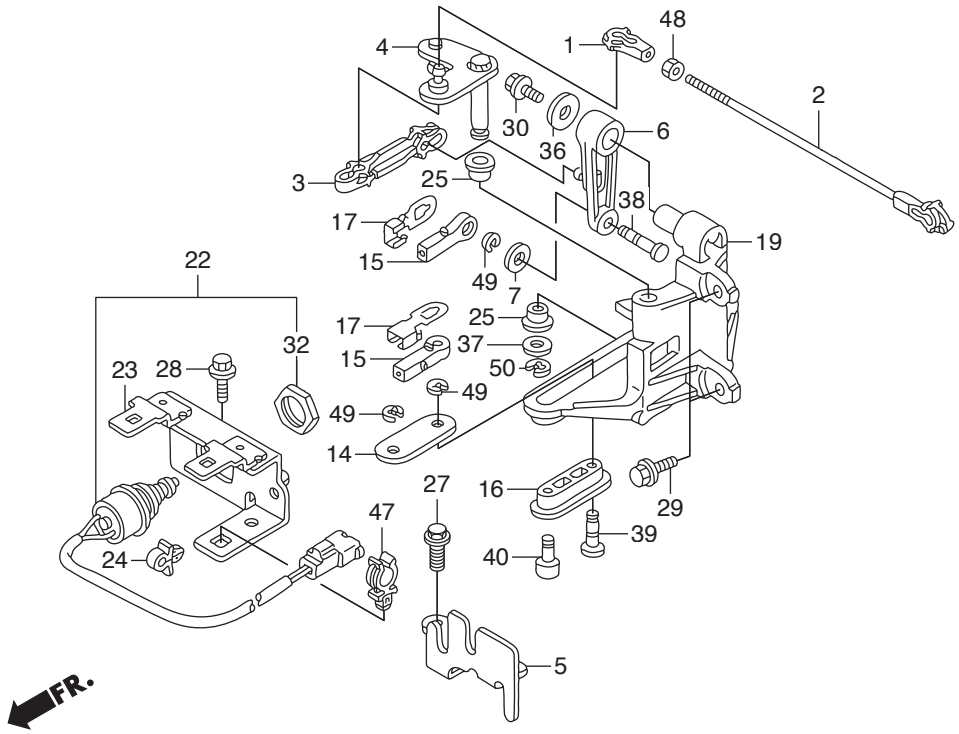
48
1
4
2
30
36
6
3
25
38
17
19
15
49
7
22
17
25
32
37
15
50
23
28
49
49
14
27
16
29
47
39
24
40
5
FR.

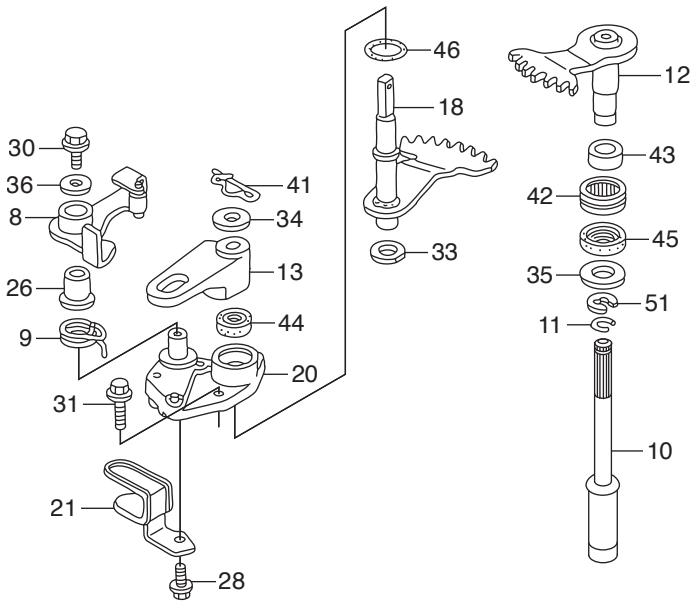
46
12
18
30
43
36
41
42
8
34
45
33
13
35
26
51
44
11
9
20
31
10
21
28

Ref.No.		Part No.	Description	Q'ty	Remarks
				BFT115A	
F-2	29	HZY3-90028-000	BOLT, FLANGE, 6X18	2	
F-2	30	HZW9-90102-000	BOLT, FLANGE, 6X12	2	
F-2	31	HZW9-90105-000	BOLT, FLANGE, 6X20	2	
F-2	32	HZV5-90302-003	NUT, HEX., 20MM	1	
F-2	33	HZW5-90501-000	WASHER, SHIFT SHAFT	1	
F-2	34	HZY3-90507-000	WASHER, PLAIN, 12MM	1	
F-2	35	HZV7-90508-000	WASHER	1	
F-2	36	HZV4-90512-000	WASHER, PLAIN, 6MM	2	
F-2	37	H921-90518-000	WASHER, PLAIN, 8MM	1	
F-2	38	HZY3-90751-000	PIN, LINK	1	
F-2	39	HZY6-90752-000	PIN, SHIFT LINK	1	
F-2	40	HZY6-90753-000	PIN, LINK	1	
F-2	41	HZY6-90755-003	PIN, SNAP, 12MM	1	
F-2	42	HZY3-91001-003	BEARING, NEEDLE, 20X28X13	1	(SOLID)
F-2	43	HZY3-91152-003	RING, INNER(15X20X23)	1	
F-2	44	HZW5-91251-003	OIL SEAL, 14X26X6	1	
F-2	45	HZY3-91255-003	SEAL, WATER(14X26X8)	1	
F-2	46	HP0X-91321-003	O-RING, 25X2.4(NOK)	1	
F-2	47	HSV1-91549-L01	HOLDER, DRAIN TUBE	1	
F-2	48	HCO-94001-05490-0S	NUT, HEX., 5MM	1	
F-2	49	HCO-94540-04029	E-RING, 4MM	3	
F-2	50	HCO-94540-06029	E-RING, 6MM	1	
F-2	51	HCO-94540-12029	E-RING, 12MM	1	

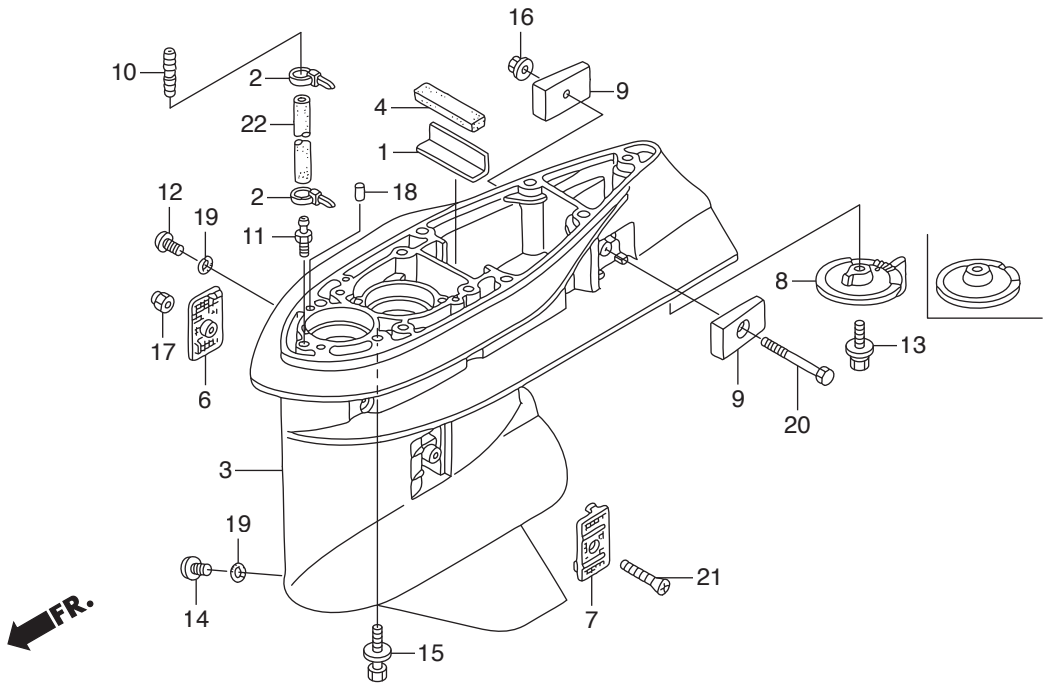
16
10
2
9
4
22
1
12
2
18
19
11
8
17
13
6
9
20
3
19
21
14
7
FR.
15

Ref.No.		Part No.	Description	Q'ty BFT115A	Remarks
F-3	1	HZW1-19286-B00	PLATE, RUBBER SETTING	1	
F-3	2	HKM3-32161-003	BAND, WIRE	2	
F-3	3	HZY6-41101-020ZC	CASE, GEAR	1	*T107* BAY BLUE
F-3	4	HZW1-41102-B00	GROMMET, GEAR CASE	1	
F-3					
F-3	6	HZY6-41104-010	SCREEN, R. WATER	1	
F-3	7	HZY6-41105-010	SCREEN, L. WATER	1	
F-3	8	HZX2-41107-C00ZC	TAB, TRIM	1	*T107* BAY BLUE
F-3	9	HZW1-41109-B00	METAL COMP., ANODE	2	
F-3	10	HZV5-41171-000	END, NIPPLE	1	
F-3	11	HZV5-41172-000	NIPPLE, SENSOR	1	
F-3	12	HZW9-90101-003	BOLT, OIL CHECK	1	
F-3	13	HZY6-90103-000	BOLT-WASHER, 10X32	1	
F-3	14	HZY3-90120-000	BOLT, DRAIN PLUG	1	
F-3	15	HZY6-90123-000	BOLT-WASHER, 10X40	7	
F-3	16	HZY1-90205-000	NUT, SELF-LOCK, 6MM	1	
F-3	17	HZV4-90302-000	NUT, SELF-LOCK, 5MM	1	
F-3	18	HZV5-90756-000	DOWEL PIN, 6X10	2	
F-3	19	HZW4-91301-003	O-RING, 6.9X1.45	2	
F-3	20	HCO-92101-06050-4J	BOLT, HEX., 6X50	1	
F-3	21	HCO-93700-05050-4J	SCREW, OVAL, 5X50	1	
F-3	22	HCO-95005-50140-30	TUBE, 5X140	1	(HC-95005-50001-30M) LD,LU
F-3		HCO-95005-50270-30	TUBE, 5X270	1	(HC-95005-50001-30M) XU

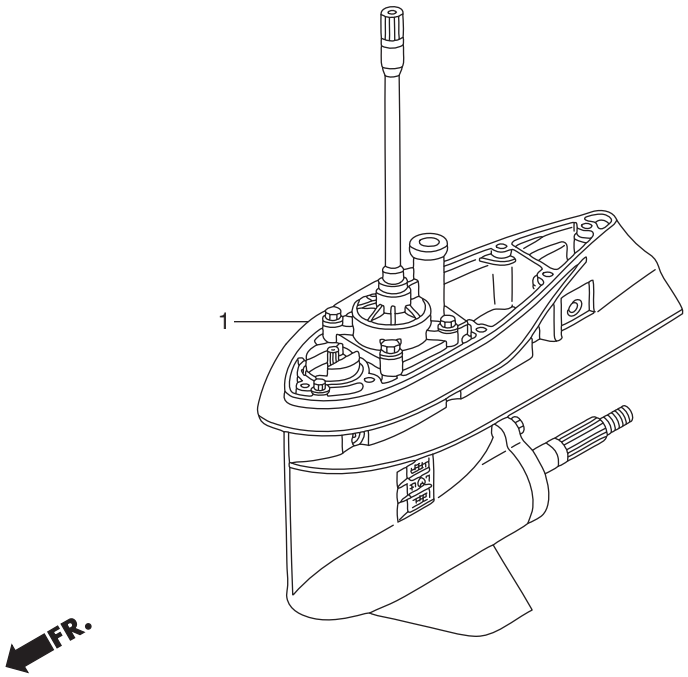
1
FR.

Ref.No.		Part No.	Description	Q'ty BFT115A	Remarks
F-3-10	1	HZY6-41100-040ZC	CASE ASSY., GEAR(L)	1	*T107* BAY BLUE LD,LU
F-3-10					
F-3-10		HZY6-41100-614ZC	CASE ASSY., GEAR(XL)	1	*T107* BAY BLUE XU

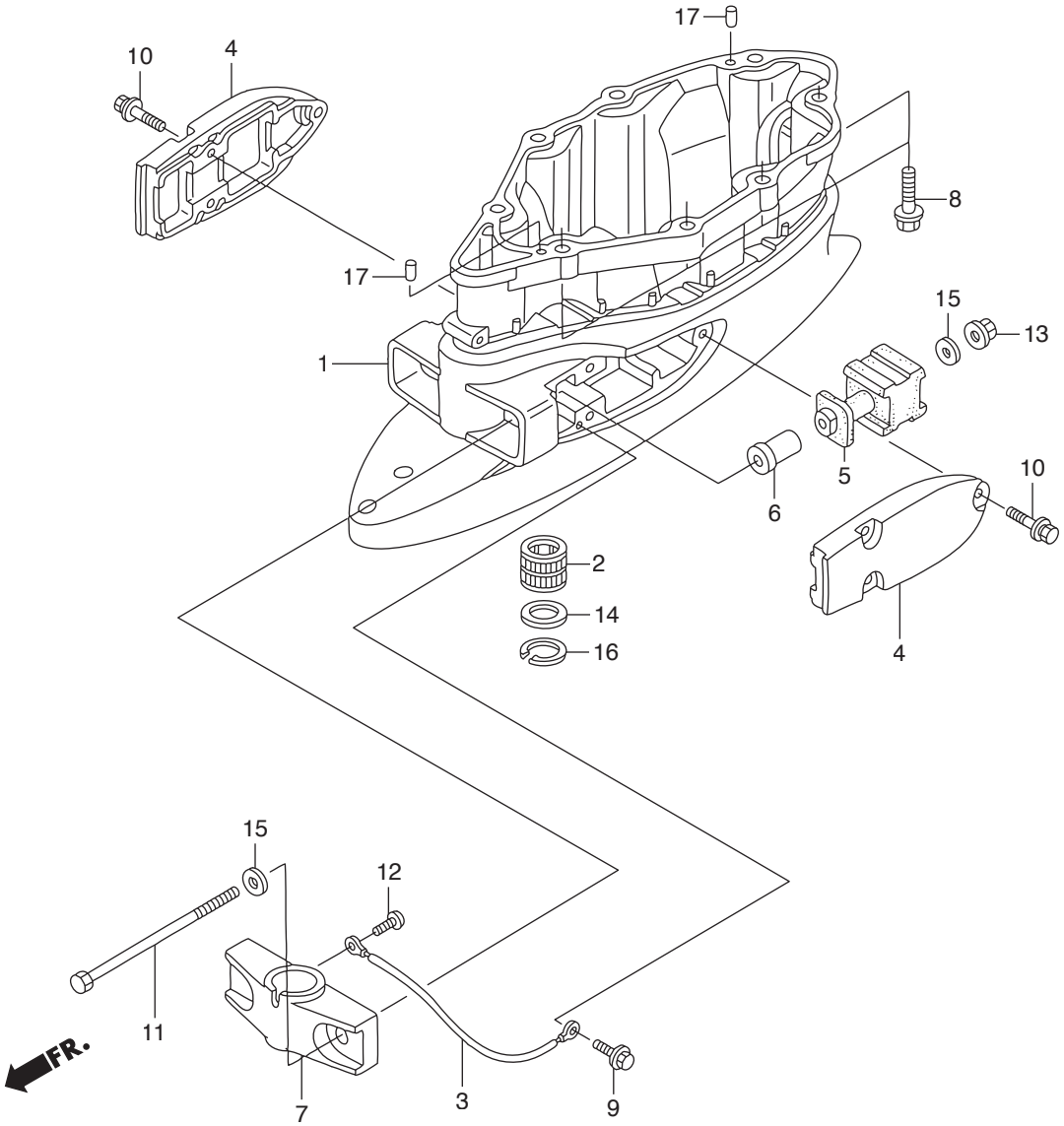
17
10
4
8
17
15
13
1
5
10
6
2
14
16
4
15
12
11
FR.
7
3
9

Ref.No.		Part No.	Description	Q'ty	Remarks
				BFT115A	
F-3-20	1	HZY6-40201-000ZC	CASE, EXTENSION(L)	1	*T107* BAY BLUE LD,LU
F-3-20		HZY6-40201-611ZC	CASE, EXTENSION	1	*T107* BAY BLUE XU
F-3-20	2	HZW1-40210-710	BUSH COMP., VERTICAL SHAFT	1	XU
F-3-20	3	HZY6-40219-023	WIRE, LEAD(1.5X137MM)	1	
F-3-20	4	HZW1-50111-010ZC	HOUSING, LOWER MOUNTING	2	*T107* BAY BLUE
F-3-20	5	HZW5-50155-000	RUBBER COMP., LOWER MOUNT	2	
F-3-20	6	HZW1-50156-010	COLLAR, LOWER MOUNTING	2	
F-3-20	7	HZW1-50161-020ZC	HOUSING, LOWER CENTER MOUNTING	1	*T107* BAY BLUE
F-3-20	8	HZY6-90002-000	BOLT, FLANGE, 10X40	8	
F-3-20	9	HZW9-90103-010	BOLT, FLANGE, 6X12	1	
F-3-20	10	HZY6-90105-000	BOLT-WASHER, 8X30	6	
F-3-20	11	HZY6-90118-000	BOLT, HEX., 12X225	2	
F-3-20	12	HZV5-90119-000	SCREW, PAN, 6X8	1	
F-3-20	13	HZW5-90302-003	NUT, FLANGE, 12MM	2	
F-3-20	14	HZW1-90501-710	WASHER, 26MM	1	XU
F-3-20	15	HZW1-90559-000	WASHER, PLAIN, 12MM	4	
F-3-20	16	HZW1-90651-710	CIRCLIP, INTERNAL, 40	1	XU
F-3-20	17	HZV5-90756-000	DOWEL PIN, 6X10	2	

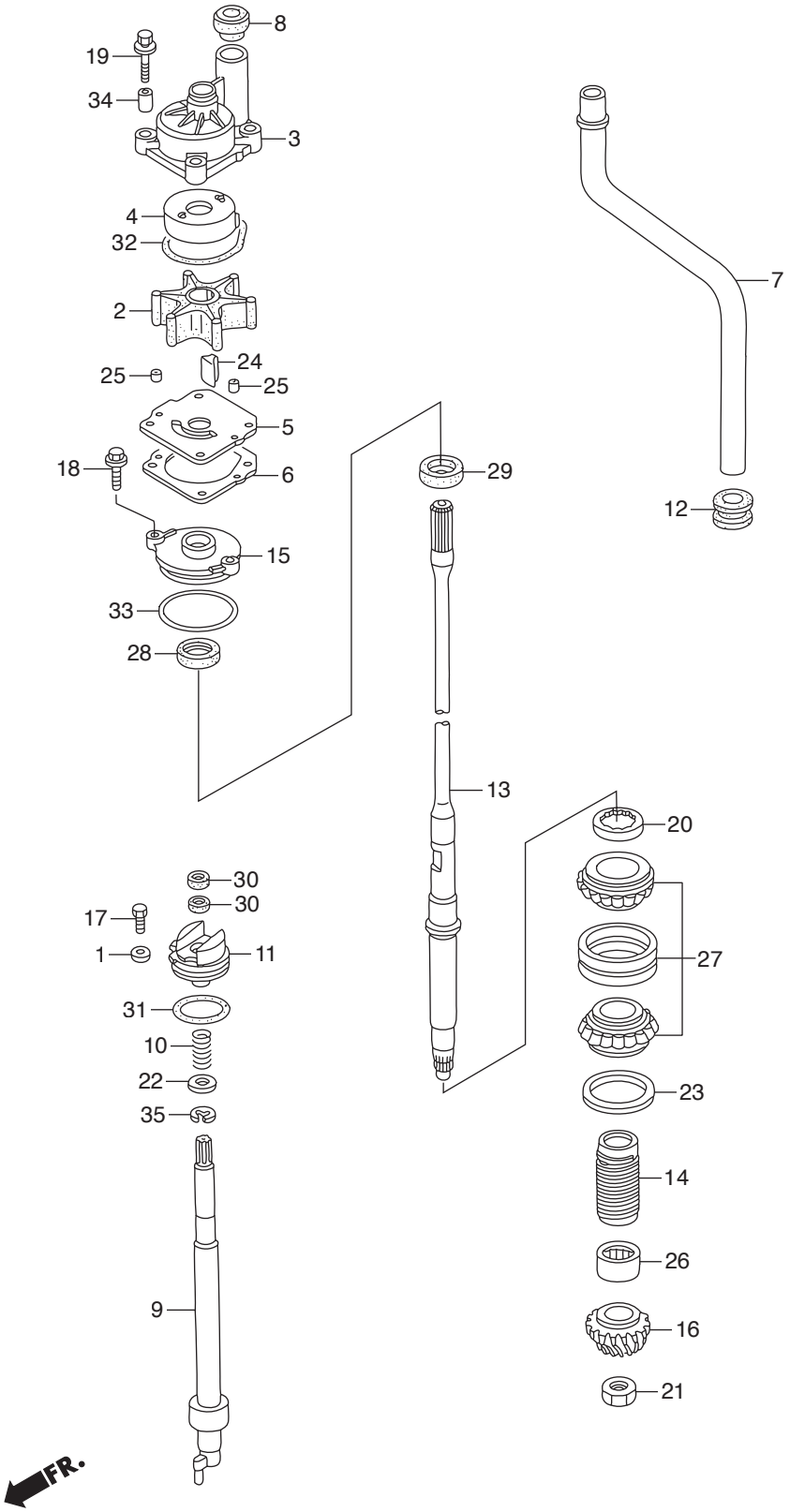
8
19
34
3
4
32
2
24
25
25
5
18
6
29
7
12
15
33
28
13
20
30
30
17
1
11
27
31
10
22
23
35
14
26
9
16
21
FR.

Ref.No.		Part No.	Description	Q'ty	Remarks
				BFT115A	
F-4	1	H921-17936-000	WASHER, PIVOT	1	
F-4	2	HZW1-19210-B04	IMPELLER, PUMP	1	
F-4	3	HZY6-19221-A00	HOUSING, IMPELLER	1	
F-4	4	HZW1-19223-B00	LINER, PUMP	1	
F-4	5	HZY6-19231-000	COVER, IMPELLER	1	
F-4	6	HZY6-19234-000	GASKET B, IMPELLER	1	
F-4	7	HZY6-19251-000	TUBE, WATER(L)	1	LD,LU
F-4		HZY6-19251-611	TUBE, WATER(XL)	1	XU
F-4	8	HZW1-19253-B01	RING, WATER TUBE SEAL	1	
F-4	9	HZY6-24310-000	ROD COMP., SHIFT	1	
F-4					
F-4	10	HZY3-24318-000	SPRING, SHIFT ROD	1	
F-4	11	HZY6-24343-000	HOLDER, SHIFT ROD	1	
F-4	12	HZW1-40204-000	GROMMET, EXTENSION CASE	1	
F-4	13	HZY6-41112-010	SHAFT, VERTICAL(L)	1	LD,LU
F-4		HZY6-41112-611	SHAFT, VERTICAL(XL)	1	XU
F-4	14	HZW1-41116-B00	SLINGER, OIL	1	
F-4	15	HZZ3-41117-000	HOUSING, WATER SEAL	1	
F-4	16	HZY6-41131-000	GEAR, PINION	1	
F-4	17	H881-90105-000	BOLT, HEX., 6X12	1	
F-4	18	HZW9-90105-000	BOLT, FLANGE, 6X20	2	
F-4	19	HZY6-90116-000	BOLT-WASHER, 8X40	4	
F-4	20	HZW1-90242-000	NUT, LOCK, 64MM	1	
F-4	21	HZW5-90303-000	NUT, HEX., 18MM	1	
F-4	22	H723-90472-000	WASHER, PLAIN, 12MM	1	
F-4	23	HZW1-90518-B00	SHIM A, GEAR(0.10)	1	
F-4		HZW1-90519-B00	SHIM B, GEAR(0.15)	1	
F-4		HZW1-90520-B00	SHIM C, GEAR(0.30)	1	
F-4		HZW1-90521-B00	SHIM D, GEAR(0.50)	1	

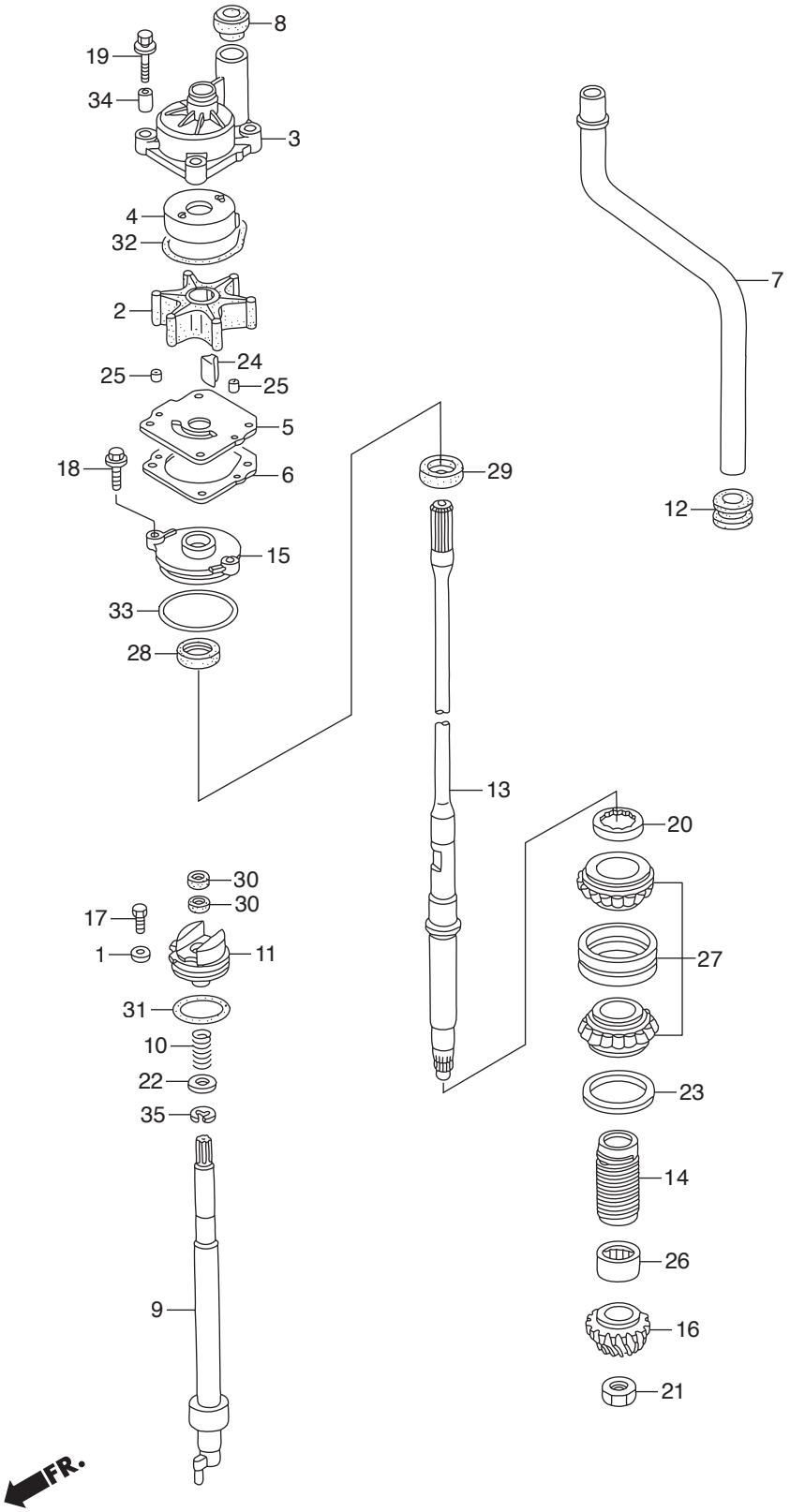
8
19
34
3
4
32
2
24
25
25
5
18
6
29
7
12
15
33
28
13
20
30
30
17
1
11
27
31
10
22
23
35
14
26
9
16
21
FR.

Ref.No.		Part No.	Description	Q'ty BFT115A	Remarks
F-4	24	HZW1-90752-B02	KEY, WOODRUFF	1	
F-4	25	HZV5-90756-000	DOWEL PIN, 6X10	2	
F-4	26	HZY6-91052-003	BEARING, NEEDLE,	1	28.575X44.45X31.75
F-4	27	HZW1-91054-B31	BEARING, TAPER ROLLER,	1	30X62X40
F-4	28	HZY6-91251-003	SEAL, WATER, 23X36X8	1	
F-4	29	HZZ3-91253-003	SEAL, WATER, 23X36X6	1	
F-4	30	HZY3-91254-003	SEAL, WATER, 12X21X6	2	
F-4	31	HZY6-91351-003	O-RING, 55.6X3.5	1	
F-4	32	HZW1-91356-B00	O-RING, WATER PUMP	1	
F-4	33	HMB0-91359-000	O-RING, 58.5X3.5	1	
F-4	34	HZY6-91552-000	COLLAR, DISTANCE	4	
F-4	35	HCO-94540-10019	E-RING, 10MM	1	

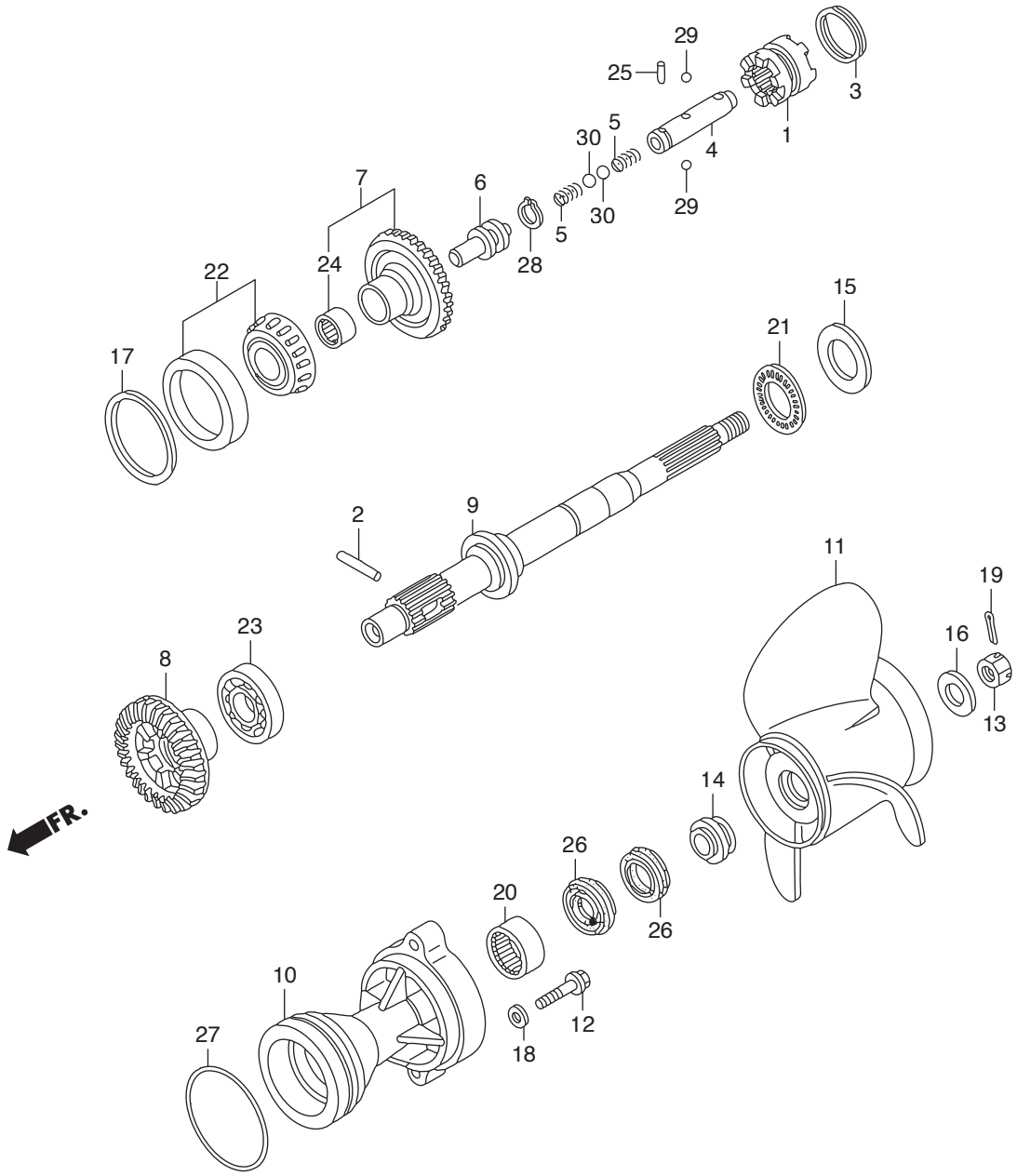
29
25
3
1
5
30
4
7
6
30
29
5
28
24
22
15
21
17
2
9
11
19
23
16
8
13
14
FR.
26
20
26
10
12
27
18

Ref.No.		Part No.	Description	Q'ty BFT115A	Remarks
F-5	1	HZY6-24101-000	SHIFTER, CLUTCH	1	
F-5	2	HZW1-24102-B00	PIN, SHIFTER, 8X47	1	
F-5	3	HZW1-24103-B00	RING, CROSS PIN	1	
F-5	4	HZY6-24122-000	SLIDER, SHIFT	1	
F-5	5	HZY6-24123-000	SPRING, SHIFT	2	
F-5	6	HZY6-24124-000	PLATE, SHIFT	1	
F-5	7	HZY6-41140-000	GEAR COMP., BEVEL(FORWARD 30T)	1	
F-5	8	HZY6-41151-000	GEAR, BEVEL(RVS. 30T)	1	
F-5	9	HZY6-41161-000	SHAFT, PROPELLER	1	
F-5	10	HZY6-41201-000ZC	HOLDER, PROPELLER SHAFT	1	*T107* BAY BLUE
F-5	11	HZY3-58130-T00	PROPELLER COMP., THREE BLADES	1	(14-1/2X15)(SUS)
F-5		HZY3-58130-T10	PROPELLER COMP., THREE BLADES	1	(14-1/4X17)(SUS)
F-5		HZY3-58130-T20	PROPELLER COMP., THREE BLADES	1	(14X19)(SUS)
F-5		HZY3-58130-T30	PROPELLER COMP., THREE BLADES	1	(14X21)(SUS)
F-5		HZY3-58130-T40	PROPELLER COMP., THREE BLADES	1	(14-1/2X23)(SUS)
F-5		HZY3-58130-T50	PROPELLER COMP., THREE BLADES	1	(14X25)(SUS)
F-5		HZY3-58130-V01ZA	PROPELLER COMP., THREE BLADES	1	(15-1/2X13)(AL) *NH283* STIN GRAY
F-5		HZY3-58130-V11ZA	PROPELLER COMP., THREE BLADES	1	(15-1/4X15)(AL) *NH283* STIN GRAY
F-5		HZY3-58130-V21ZA	PROPELLER COMP., THREE BLADES	1	(15X17)(AL) *NH283* STIN GRAY
F-5		HZY3-58130-V31ZA	PROPELLER COMP., THREE BLADES	1	(14-3/4X19)(AL) *NH283* STIN GRAY
F-5		HZY3-58130-V41ZA	PROPELLER COMP., THREE BLADES	1	(14-1/2X21)(AL) *NH283* STIN GRAY
F-5		HZY3-58130-V51ZA	PROPELLER COMP., THREE BLADES	1	(14-1/4X23)(AL) *NH283* STIN GRAY
F-5	12	HZY6-90104-000	BOLT, FLANGE, 10X40	2	
F-5	13	HZW1-90301-B00	NUT, CASTLE, 18MM	1	
F-5	14	HZY3-90506-000	WASHER, PROPELLER THRUST	1	
F-5	15	HZW5-90509-711	WASHER, THRUST BEARING	1	
F-5	16	HZY3-90512-000	WASHER, PROPELLER	1	
F-5	17	HZY3-90528-000	SHIM A, BEVEL(0.10)	1	
F-5		HZY3-90529-000	SHIM B, BEVEL(0.15)	1	

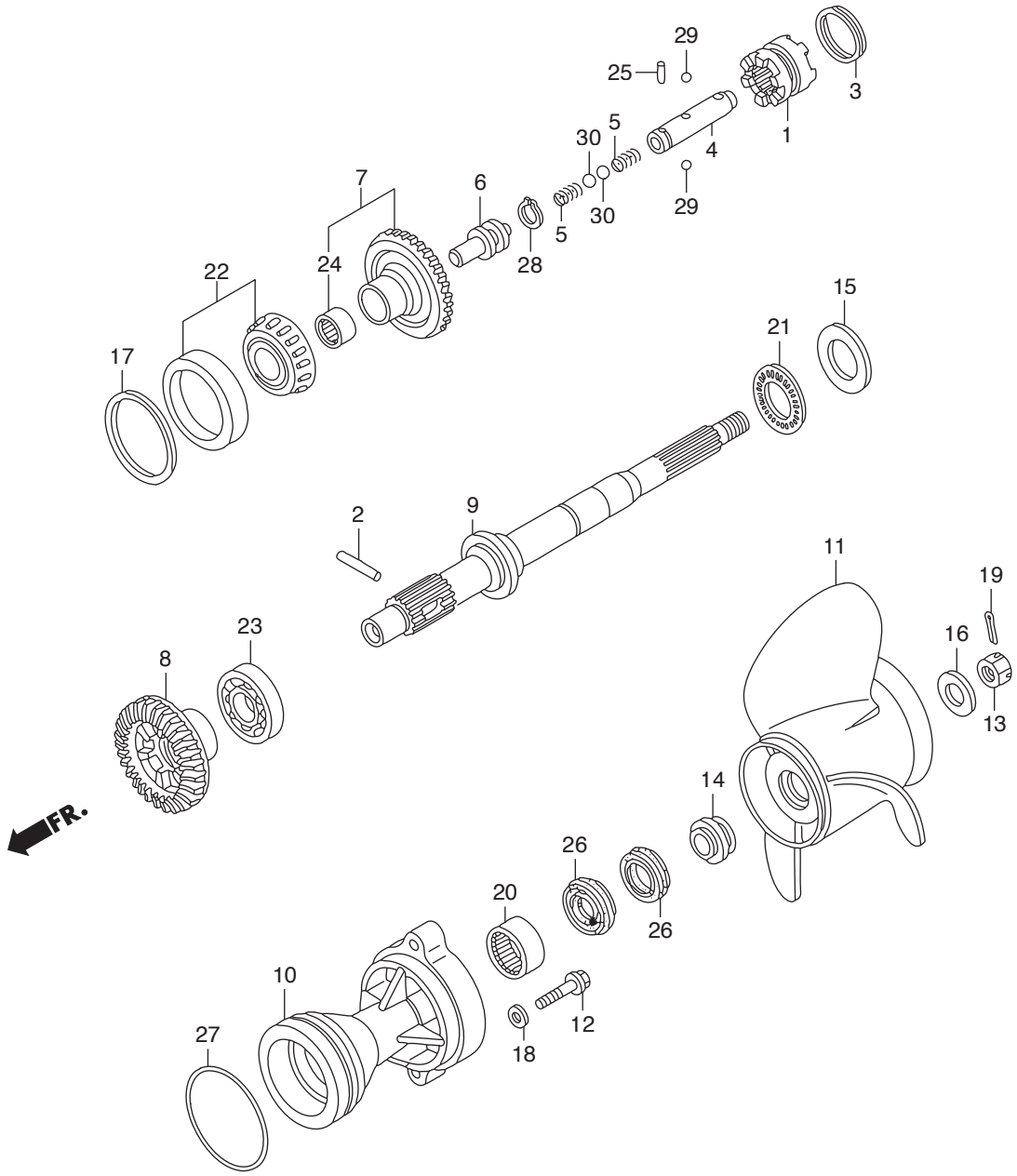
29
25
3
1
5
30
4
7
6
30
29
5
28
24
22
15
21
17
2
9
11
19
23
16
8
13
14
FR.
26
20
26
10
12
27
18

Ref.No.		Part No.	Description	Q'ty BFT115A	Remarks
F-5		HZY3-90530-000	SHIM C, BEVEL(0.30)	1	
F-5		HZY3-90531-000	SHIM D, BEVEL(0.50)	1	
F-5	18	HZV5-90563-000	WASHER, PLAIN, 10MM	2	
F-5	19	HZW1-90758-B00	PIN, SPLIT, 4.0	1	
F-5	20	HMY5-91005-601	BEARING, NEEDLE, 30X37X26	1	
F-5	21	HPT2-91005-N01	BEARING, THRUST(F)	1	
F-5	22	HZY6-91051-003	BEARING, TAPER, 50X90X28	1	
F-5	23	HZY6-91055-004	BEARING, RADIAL BALL, 50X90X20	1	
F-5	24	HZW5-91056-003	BEARING, NEEDLE(25X32X26)	1	
F-5	25	HZW1-91101-003	ROLLER, 3X12.8	1	
F-5	26	HZZ3-91252-003	SEAL, WATER, 30X45X7	2	
F-5	27	HZY3-91351-003	O-RING, 105X3.1	1	
F-5	28	HCO-94510-14000	CIRCLIP, EXTERNAL, 14MM	1	
F-5	29	HCO-96211-07000	BALL, STEEL, #7(7/32)	2	
F-5	30	HCO-96211-09000	BALL, STEEL, #9(9/32)	2	

F-6 FUEL TUBE

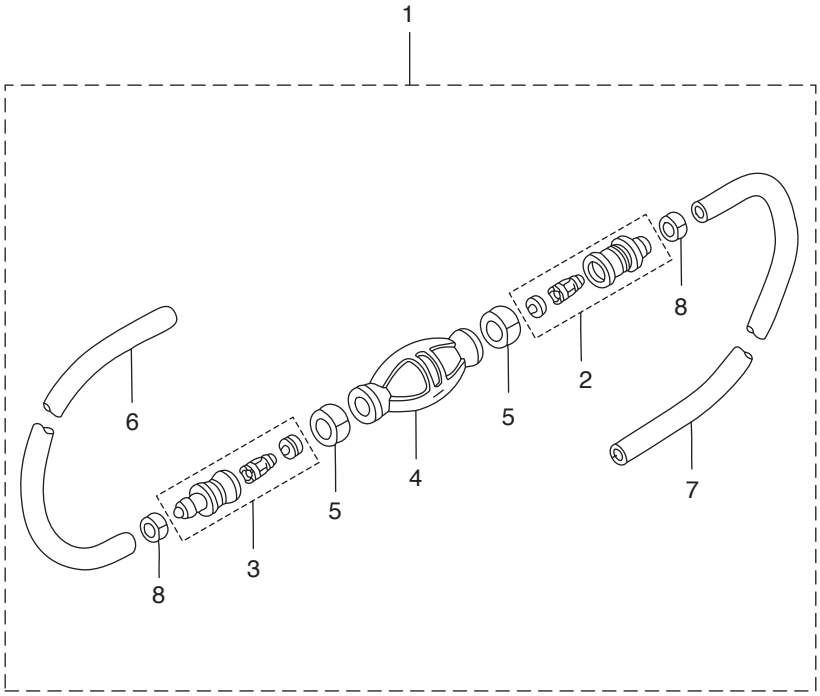

Ref.No.		Part No.	Description	Q'ty BFT115A	Remarks
F-6	1	3T1-70200-1	PRIMER BULB ASSY	1	EU/EX
F-6	2	3C7-70220-1	* JOINT ASSY (INLET)	1	ALL
F-6	3	3C7-70224-1	* JOINT ASSY (OUTLET)	1	ALL
F-6	4	3C7-70211-1	* PRIMER BULB	1	EU/EX
F-6	5	3C7-70217-0	* CLAMP	2	ALL
F-6	6	98AB-70-700	* HOSE	1	EU/EX 98AB-701000
F-6	7	98AB-701600	* HOSE	1	EU/EX 98AB-701000 x2
F-6	8	332-70201-0	* CLAMP	2	ALL

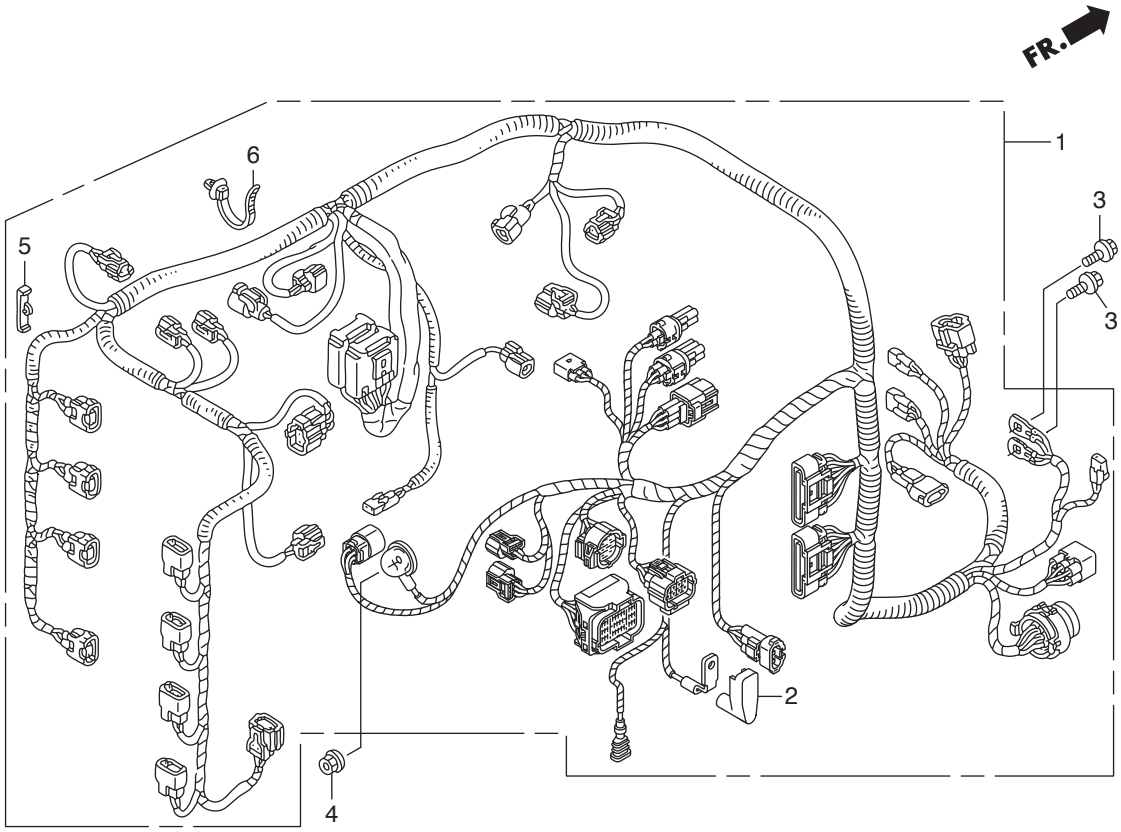
FR.
1
2
3
3
4
5
6

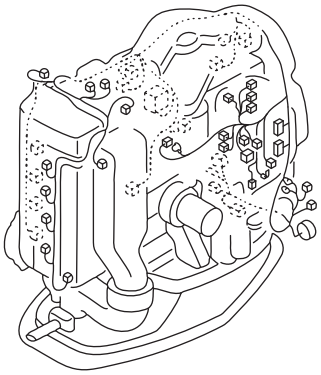

Ref.No.		Part No.	Description	Q'ty BFT115A	Remarks
F-7	1	HZX1-32100-020	HARNESS ASSY., MAIN WIRE	1	
F-7					
F-7					
F-7					
F-7	2	HZY6-32414-300	COVER B, TERMINAL(L)	1	
F-7	3	HZW9-90013-000	BOLT, FLANGE, 6X12	2	
F-7	4	HZY3-90304-000	NUT-WASHER, 6MM	1	
F-7	5	HZY3-90653-003	CLIP, WIRE HARNESS	3	
F-7	6	HS0A-91541-003	CLIP, HARNESS BAND(BLACK)	22	(145MM)

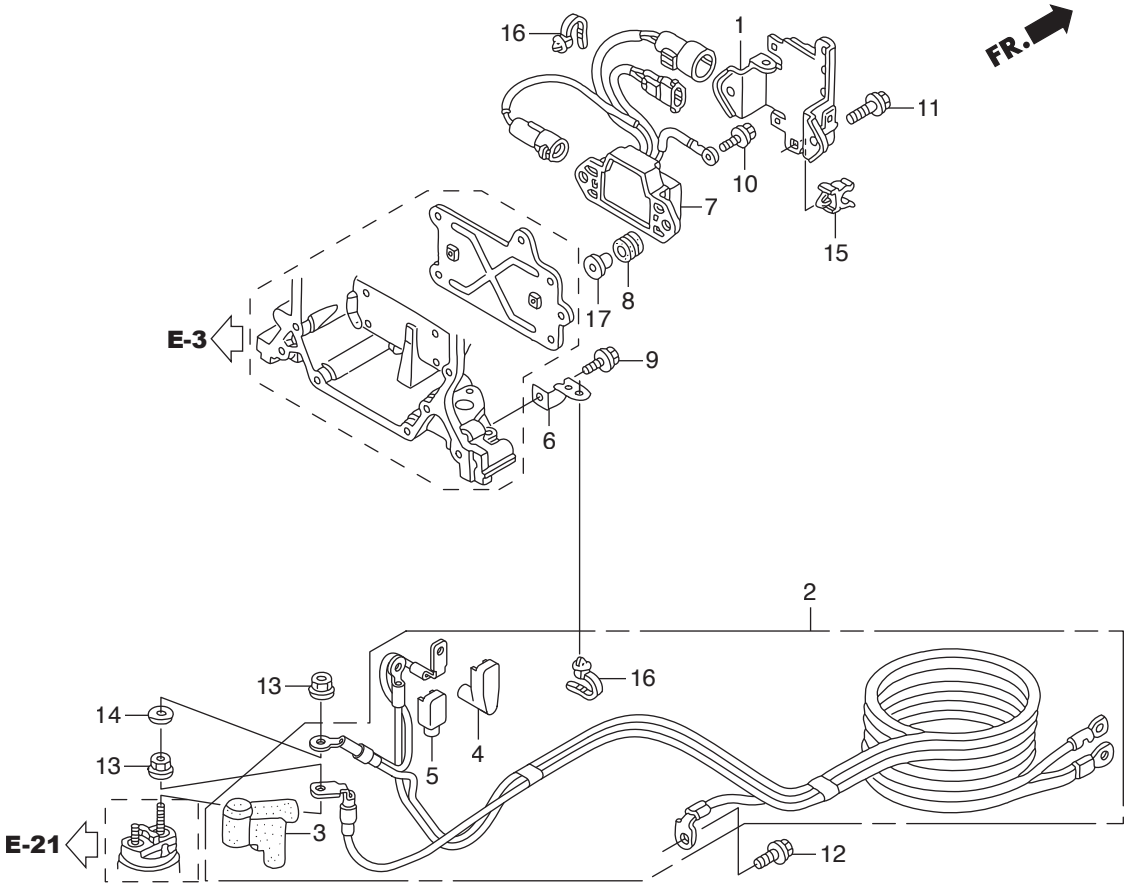
FR.
1
2
3
4
5
6
7
8
9
10
11
12
13
13
14
15
16
16
17
E-3
E-21

Ref.No.		Part No.	Description	Q'ty BFT115A	Remarks
F-7-10	1	HZY6-32101-000	BRACKET A, COUPLER	1	
F-7-10	2	HZY6-32410-020	CABLE ASSY., STARTER	1	
F-7-10	3	HZY3-32411-003	COVER, STARTER TERMINAL	1	
F-7-10	4	HZY6-32414-300	COVER B, TERMINAL(L)	1	
F-7-10	5	HZY6-32414-640	COVER B, TERMINAL	1	
F-7-10	6	HZY6-32419-000	BRACKET B, CABLE	1	
F-7-10	7	HZY6-38550-003	RELAY ASSY., POWER TILT	1	
F-7-10	8	HZW1-38551-000	GROMMET, RELAY	2	
F-7-10	9	HZW9-90011-000	BOLT, FLANGE, 6X14(CT200)	1	
F-7-10	10	HZW9-90013-000	BOLT, FLANGE, 6X12	1	
F-7-10	11	HZY3-90030-000	BOLT, FLANGE, 6X22	2	
F-7-10	12	HZY3-90107-000	BOLT, FLANGE, 8X18	1	
F-7-10	13	HZW1-90203-000	NUT-WASHER, 8MM	2	
F-7-10	14	HZY3-90405-000	WASHER, PLAIN, 8MM	1	
F-7-10	15	HSB2-90687-003	CLIP, FUEL TUBE, 14	1	
F-7-10	16	HS0A-91541-003	CLIP, HARNESS BAND(BLACK)	5	(145MM)
F-7-10	17	HZV5-91553-010	COLLAR, C.D.I. UNIT CASE	2	

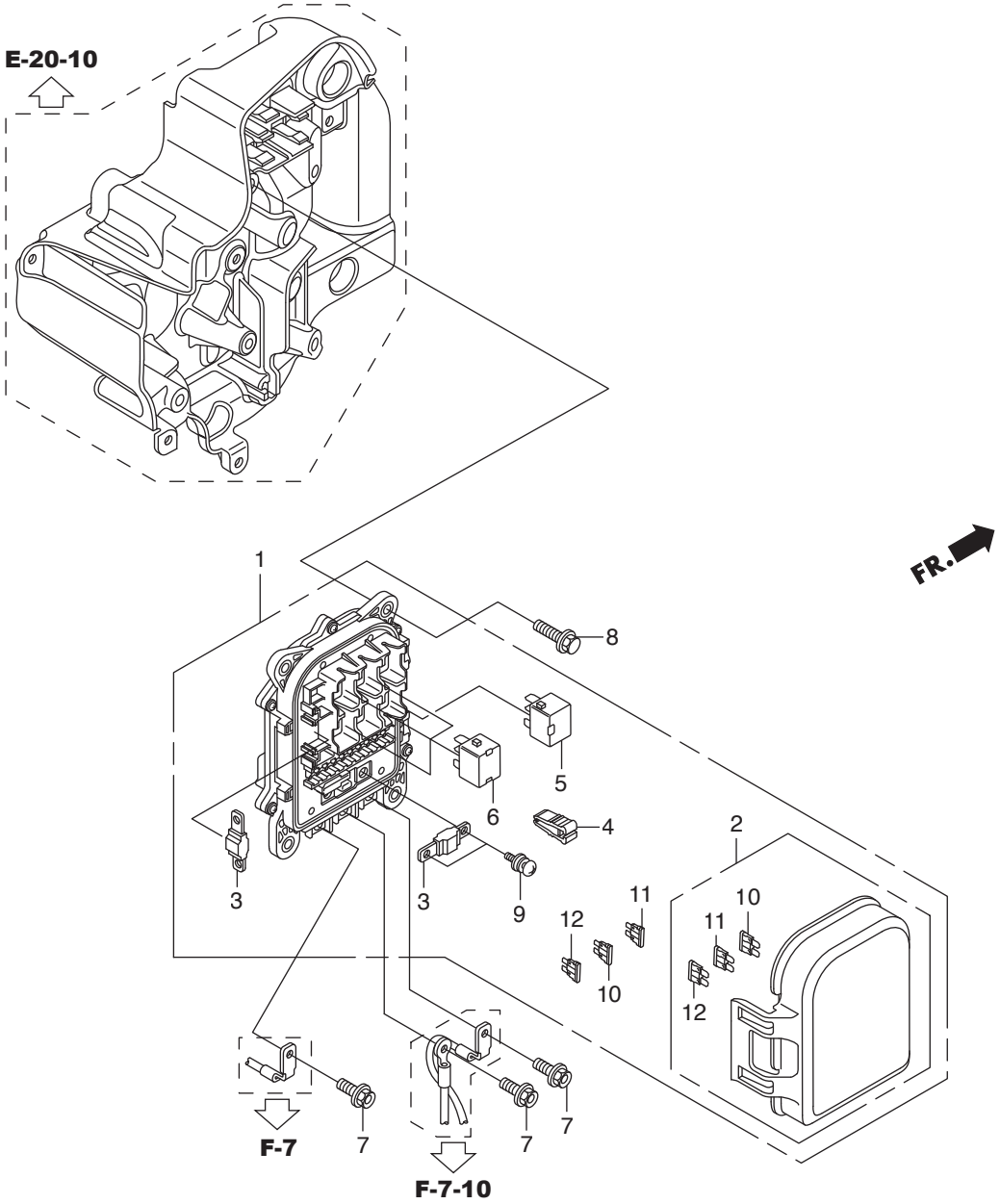
E-20-10
FR.
1
2
3
3
4
5
6
7
7
7
8
9
10
10
11
11
12
12
F-7
F-7-10

Ref.No.		Part No.	Description	Q'ty BFT115A	Remarks
F-7-20	1	HZY6-32370-004	BOX ASSY., JUNCTION	1	
F-7-20					
F-7-20					
F-7-20					
F-7-20	2	HZY6-32371-004	COVER COMP., FUSE	1	
F-7-20					
F-7-20					
F-7-20					
F-7-20	3	HZY6-38228-003	FUSE, BLOCK 100A(L TYPE)	2	
F-7-20	4	HZY6-38235-004	PULLER, MINI FUSE	1	
F-7-20					
F-7-20					
F-7-20					
F-7-20	5	HSDA-39794-004	RELAY ASSY., FUEL PUMP(DENSO)	1	
F-7-20	6	HZY6-39794-003	RELAY ASSY., POWER(12V-20A)	3	(MICRO ISO 4P)
F-7-20	7	HZW9-90013-000	BOLT, FLANGE, 6X12	3	
F-7-20	8	HZW5-90018-000	BOLT, FLANGE, 6X20	4	
F-7-20	9	HZY6-90135-004	SCREW-WASHER, 5X15	2	
F-7-20					
F-7-20					
F-7-20					
F-7-20	10	HCO-98200-41000	FUSE, MINI(10A)	4	
F-7-20	11	HCO-98200-41500	FUSE, MINI(15A)	3	
F-7-20	12	HCO-98200-43000	FUSE, MINI(30A)	3	

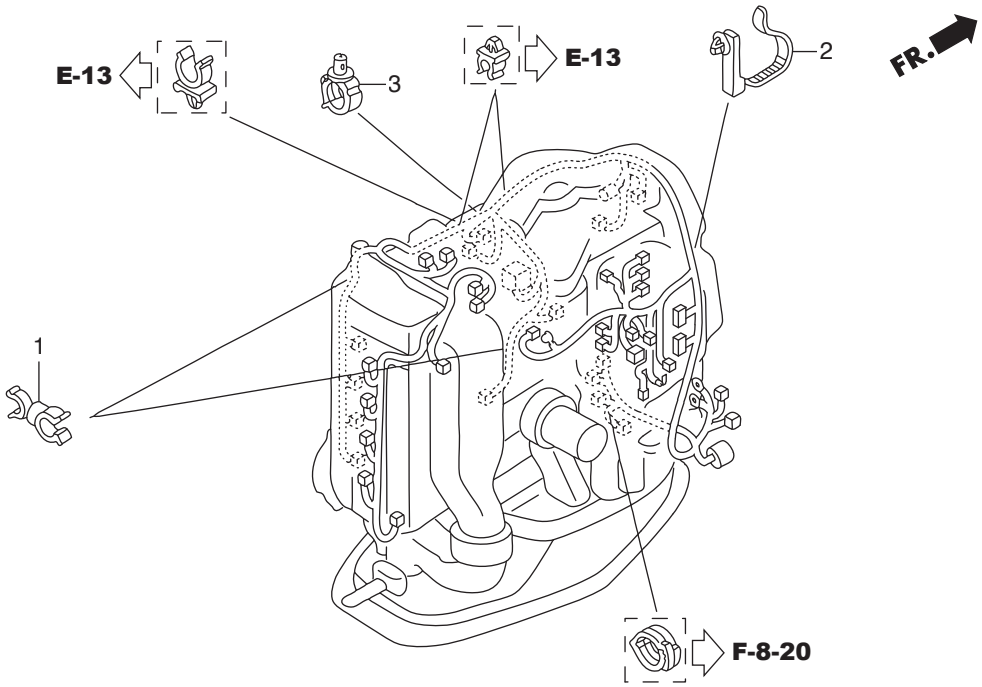
E-13
3
E-13
2
FR.
1
F-8-20

Ref.No.		Part No.	Description	Q'ty BFT115A	Remarks
F-7-30	1	HVM0-16965-771	CLAMP, HOSE	2	
F-7-30	2	HSM4-32134-003	BAND, HARNESS OFFSET(10)	1	(BROWN)(122.5MM)
F-7-30	3	HPK1-32742-003	CLAMP, ENGINE SUB CORD	1	

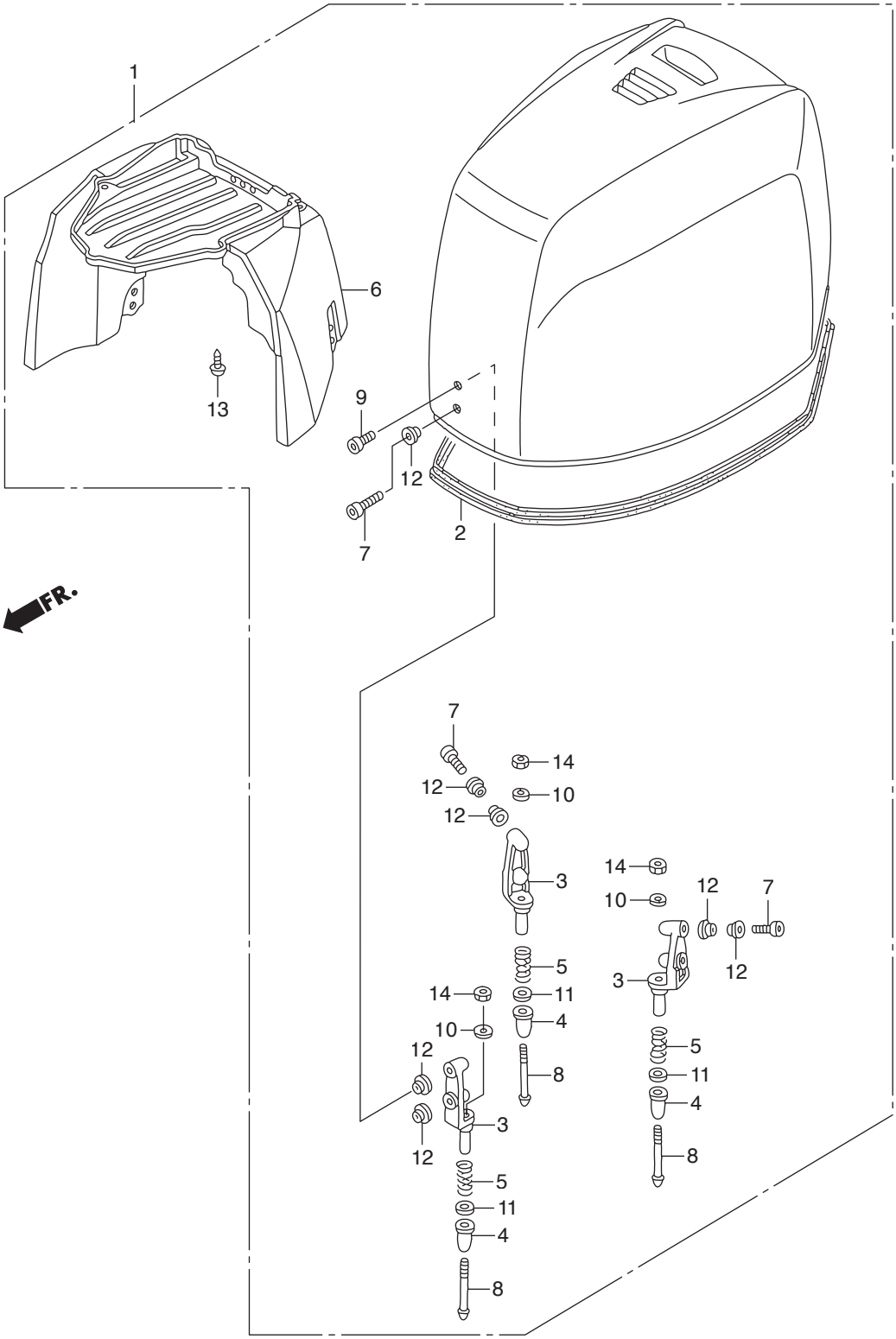
1
6
13
9
12
7
2
FR.
7
14
12
10
12
3
14
10
12
7
12
3
5
14
11
4
10
12
8
5
11
4
3
12
8
5
11
4
8

Ref.No.		Part No.	Description	Q'ty BFT115A	Remarks
F-8	1	HZX1-63100-R00ZA	COVER ASSY., ENGINE	1	*T107* BAY BLUE
F-8	2	HZY6-63102-010	SEAL, ENGINE COVER	1	
F-8	3	HZY3-63107-000	BRACKET, HOOK	3	
F-8	4	HZY3-63108-000	DAMPER, HOOK	3	
F-8	5	HZY3-63119-000	SPRING, LOCK ADJUSTER	3	
F-8	6	HZY6-63144-000	GUIDE, ENGINE COVER AIR	1	
F-8	7	HZX1-90101-R00	BOLT, SOCKET, 6X20	5	
F-8	8	HZY3-90109-010	BOLT, COVER LOCK	3	
F-8	9	HZY3-90133-000	BOLT, SOCKET, 6X16	1	
F-8	10	H921-90504-010	WASHER, PLAIN, 6MM	3	
F-8	11	HZY3-90507-000	WASHER, PLAIN, 12MM	3	
F-8	12	HZY3-91556-000	COLLAR, DISTANCE, 6.5X9X3	11	
F-8	13	HCO-93913-142J0	SCREW, TAPPING, 4X12	8	
F-8	14	HCO-94002-06490-0S	NUT, HEX., 6MM	3	

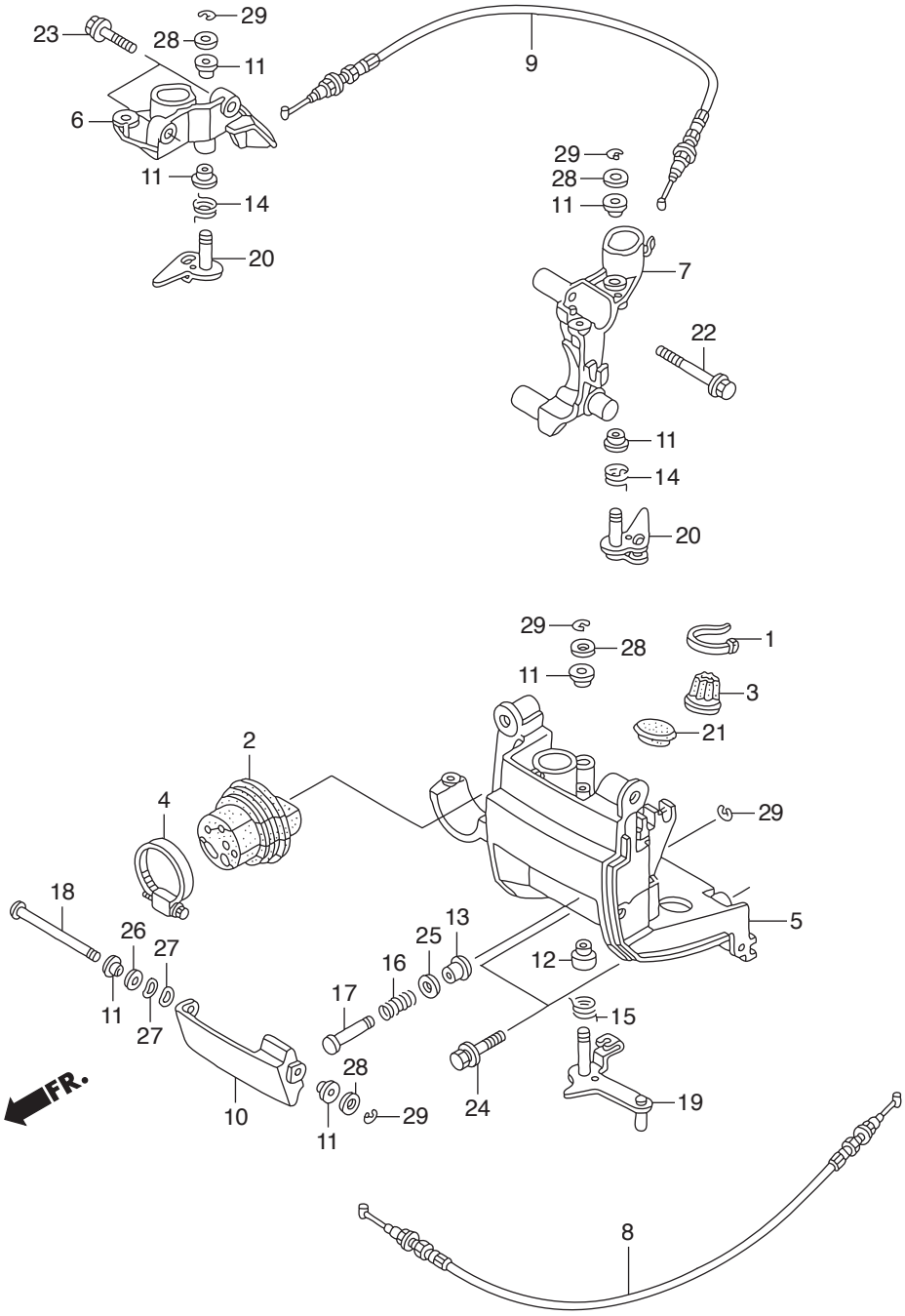
29
23
28
11
9
6
11
14
20
29
28
11
7
22
11
14
20
29
28
1
11
3
21
2
4
29
18
26
27
13
25
5
16
12
11
27
17
15
28
FR.
10
11
29
24
19
8

Ref.No.		Part No.	Description	Q'ty	Remarks
				BFT115A	
F-8-10	1	HMG9-35701-950	BAND(BLACK 3.5X140)	1	
F-8-10	2	HZY6-40105-020	GROMMET, REMOTE CONTROL CABLE	1	
F-8-10	3	HZW1-40107-700	GROMMET, UNDER CASE(C)	1	
F-8-10	4	HZY3-40119-003	BAND, UNDER CASE GROMMET	1	
F-8-10	5	HZY6-40154-000ZC	BRACKET, FR. UNDER COVER	1	*T107* BAY BLUE
F-8-10	6	HZY6-40155-000	BRACKET, R. SIDE COVER	1	
F-8-10	7	HZY6-40157-000	BRACKET, L. SIDE COVER	1	
F-8-10	8	HZY6-60180-003	CABLE COMP. A, COVER LOCK	1	
F-8-10	9	HZY6-60185-003	CABLE COMP. B, COVER LOCK	1	
F-8-10	10	HZY3-63201-000ZC	LEVER, COVER LOCK	1	*T107* BAY BLUE
F-8-10	11	HZY3-63205-000	BUSH A, COVER LOCK	7	
F-8-10	12	HZY6-63205-000	BUSH A, COVER LOCK	1	
F-8-10	13	HZY3-63208-000	BUSH B, COVER LOCK	1	
F-8-10	14	HZY3-63212-000	SPRING, COVER LOCK HOOK	2	
F-8-10	15	HZY6-63212-000	SPRING, COVER LOCK HOOK	1	
F-8-10	16	HZY6-63223-000	SPRING, LOCK LEVER RETURN	1	
F-8-10	17	HZY3-63224-000	SHAFT, COVER OPEN	1	
F-8-10	18	HZY6-63225-000	SHAFT, FR. LOCK	1	
F-8-10	19	HZY6-63240-000	LOCK COMP., FR.	1	
F-8-10	20	HZY3-63260-000	LOCK COMP., SIDE	2	
F-8-10	21	HZC0-63515-700	CAP, L. SIDE COVER	1	
F-8-10	22	HZY6-90001-000	BOLT, FLANGE, 8X55	2	
F-8-10	23	HZY3-90030-000	BOLT, FLANGE, 6X22	2	
F-8-10	24	HZY6-90105-000	BOLT-WASHER, 8X30	2	
F-8-10	25	HMM8-90501-610	WASHER, PLAIN, 8MM	1	
F-8-10	26	HMM8-90502-610	WASHER, PLAIN, 10MM	1	
F-8-10	27	HZW9-90506-000	WASHER, WAVE, 10MM	2	
F-8-10	28	H921-90518-000	WASHER, PLAIN, 8MM	4	
F-8-10	29	HCO-94540-06029	E-RING, 6MM	5	

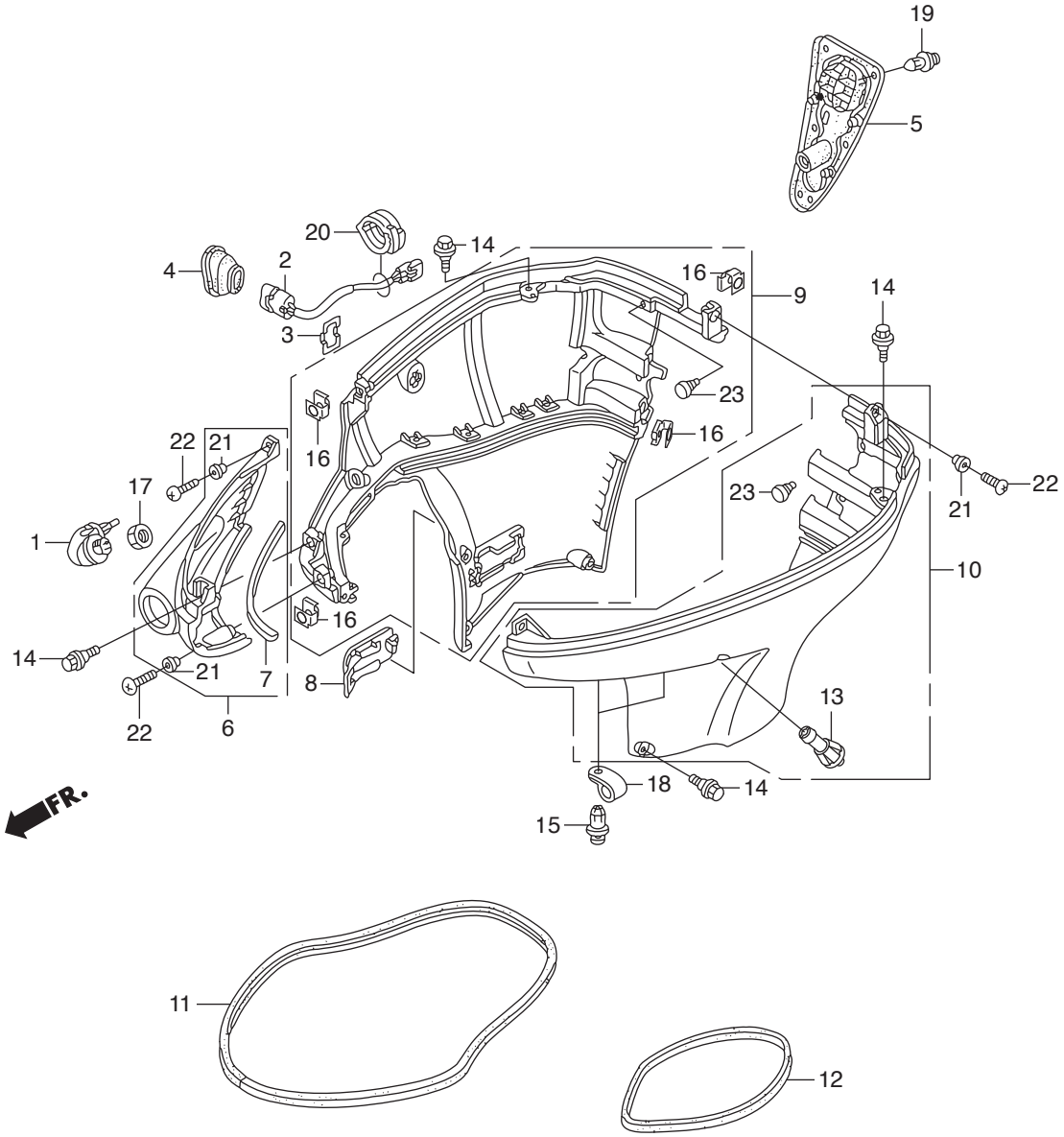
19
5
20
14
4
2
16
9
14
3
23
22
21
16
16
17
23
22
21
1
10
16
14
21
7
8
13
22
6
18
14
FR.
15
11
12

Ref.No.		Part No.	Description	Q'ty BFT115A	Remarks
F-8-20	1	HZY6-19289-000	CAP, WATER JOINT	1	
F-8-20	2	HZY6-35640-003	SWITCH ASSY., POWER TILT	1	
F-8-20	3	HZY3-35645-000	STAY, POWER TILT SWITCH	1	
F-8-20	4	HZY6-40114-010	GROMMET, POWER TILT SWITCH	1	
F-8-20	5	HZY6-40116-000	GROMMET, UNDER COVER	1	
F-8-20	6	HZY6-40151-010ZD	COVER, FR. SEPARATE	1	*T107* BAY BLUE
F-8-20	7	HZY6-40152-300	SEAL, FR. SEPARATE COVER	1	
F-8-20	8	HZY6-40212-020ZC	COVER, DRAIN PLUG	1	*T107* BAY BLUE
F-8-20	9	HZY6-63711-010ZC	COVER, R. ENGINE UNDER	1	*T107* BAY BLUE
F-8-20	10	HZY6-63716-010ZC	COVER, L. ENGINE UNDER	1	*T107* BAY BLUE
F-8-20	11	HZY6-63718-000	SEAL A, COVER UNDER	1	
F-8-20	12	HZY6-63719-000	SEAL B, COVER UNDER	1	
F-8-20	13	HZY6-82873-000	GROMMET, WATER CHECK	1	
F-8-20	14	HZY3-90111-000	BOLT, SPECIAL, 6X17	12	
F-8-20	15	HZV5-90127-003	SCREW, RIVET, 5X10	2	
F-8-20	16	HZY6-90301-000	NUT, CLIP	6	
F-8-20	17	H921-90302-000	NUT, HEX., 16MM	1	
F-8-20	18	HZB5-90626-730	CLIP(10.7MM)	2	
F-8-20	19	HHC4-90653-900	CLIP, MUDGUARD	6	
F-8-20	20	HKJ2-90683-003	CLIP, WIRE HARNESS	1	
F-8-20	21	HZY6-91553-000	COLLAR, DISTANCE, 6.5X9X5	6	
F-8-20	22	HCO-93500-06025-4J	SCREW, PAN, 6X25	6	
F-8-20	23	HCO-95011-62000	RUBBER B, STAND STOPPER	2	

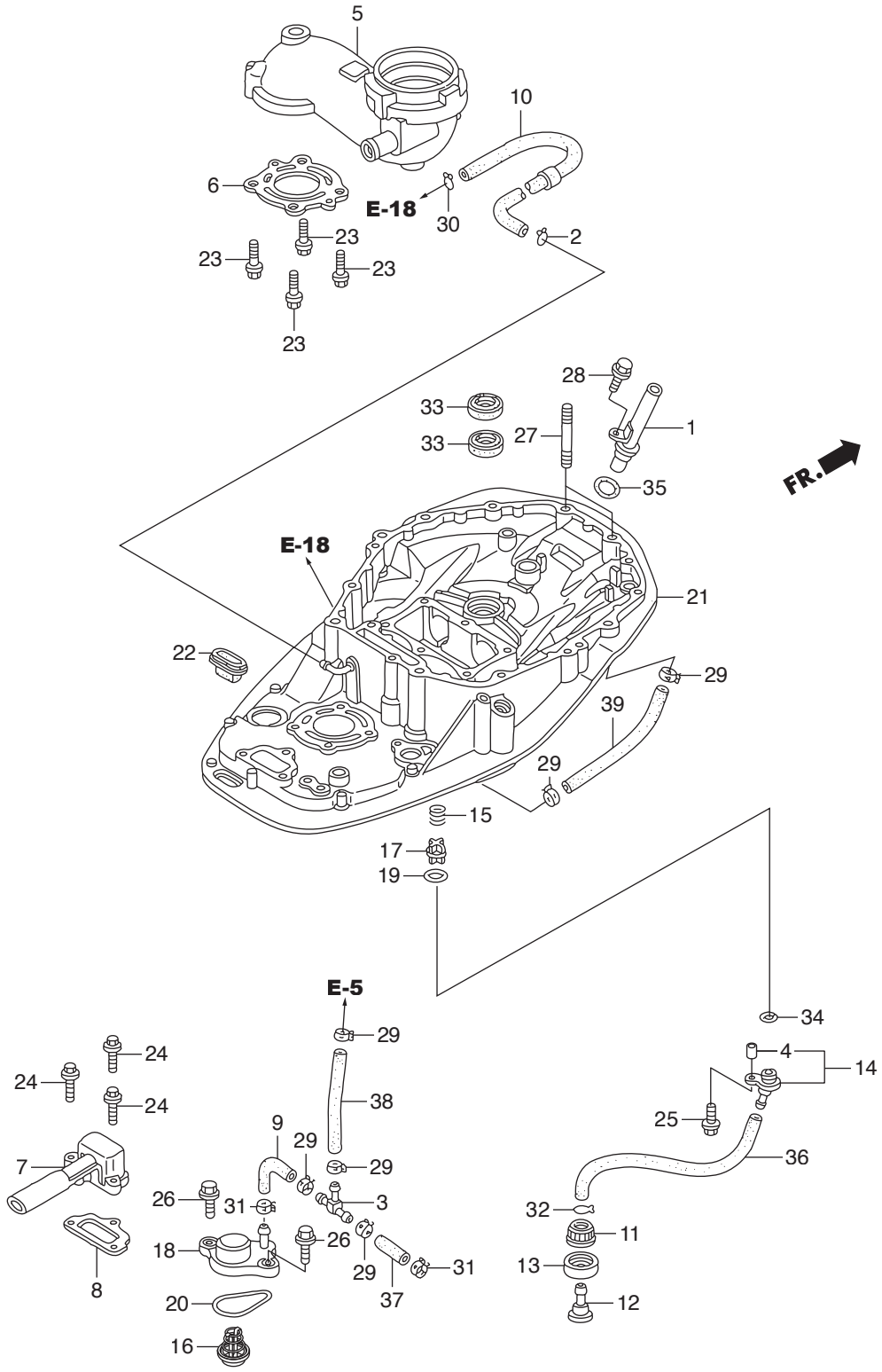
5
10
6
E-18
30
2
23
23
23
23
28
33
33
27
1
35
FR.
E-18
21
22
29
39
29
15
17
19
E-5
29
34
24
24
24
4
14
38
25
9
29
36
7
29
26
31
3
32
11
18
26
29
31
13
8
37
12
20
16

Ref.No.		Part No.	Description	Q'ty	Remarks
				BFT115A	
F-9	1	HZW1-15665-020	PIPE COMP., OIL LEVEL	1	
F-9	2	HGHB-16163-610	CLIP, TUBE	1	
F-9	3	HMN5-17195-000	T-JOINT	1	
F-9	4	HZV5-17202-310	COLLAR, DISTANCE, 6.5X11X7.5	1	
F-9	5	HZY6-18130-000ZA	GUIDE COMP., EX.	1	*NH8* DARK GRAY
F-9	6	HZY6-18135-003	GASKET, EX. GUIDE	1	
F-9	7	HZY6-18211-000	PORT, IDLE EXHAUST	1	
F-9	8	HZY6-18212-000	GASKET, IDLE EX. PORT	1	
F-9	9	HZY6-19256-000	TUBE, WATER RELIEF	1	
F-9	10	HZY6-19267-010	TUBE F, WATER	1	
F-9	11	HZY3-19270-000	NUT, WATER MOUTH	1	
F-9	12	HZY3-19271-000	JOINT, WATER HOSE	1	
F-9	13	HZY3-19272-000	SEAT, WATER MOUTH	1	
F-9	14	HZZ3-19277-000	COVER, FLUSH VALVE	1	
F-9	15	HZW9-19279-000	SPRING, FLUSH VALVE	1	
F-9	16	HZY6-19290-003	VALVE ASSY., RELIEF	1	
F-9	17	HZW9-19291-000	VALVE, FLASH	1	
F-9	18	HZY6-19295-000	COVER, RELIEF VALVE	1	
F-9	19	HZW9-19297-000	PACKING, FLASH VALVE	1	
F-9	20	HZW9-19317-000	O-RING, THERMOSTAT COVER	1	
F-9	21	HZY6-23170-000ZA	CASE COMP., MOUNT	1	*NH8* DARK GRAY
F-9	22	HZY3-23173-010	RUBBER, MOUNT CASE SEAL	1	
F-9	23	HZY6-90014-000	BOLT, FLANGE, 8X30	4	
F-9	24	HZW9-90016-000	BOLT, FLANGE, 6X25	3	
F-9	25	HZY3-90017-000	BOLT, FLANGE, 6X16	1	
F-9	26	HZY3-90030-000	BOLT, FLANGE, 6X22	2	
F-9	27	HZY6-90045-000	BOLT, STUD, 10X55	2	
F-9	28	HZY3-90056-000	BOLT, FLANGE, 6X12	1	
F-9	29	HZY3-90601-030	CLAMP, TUBE(D10.5)	6	

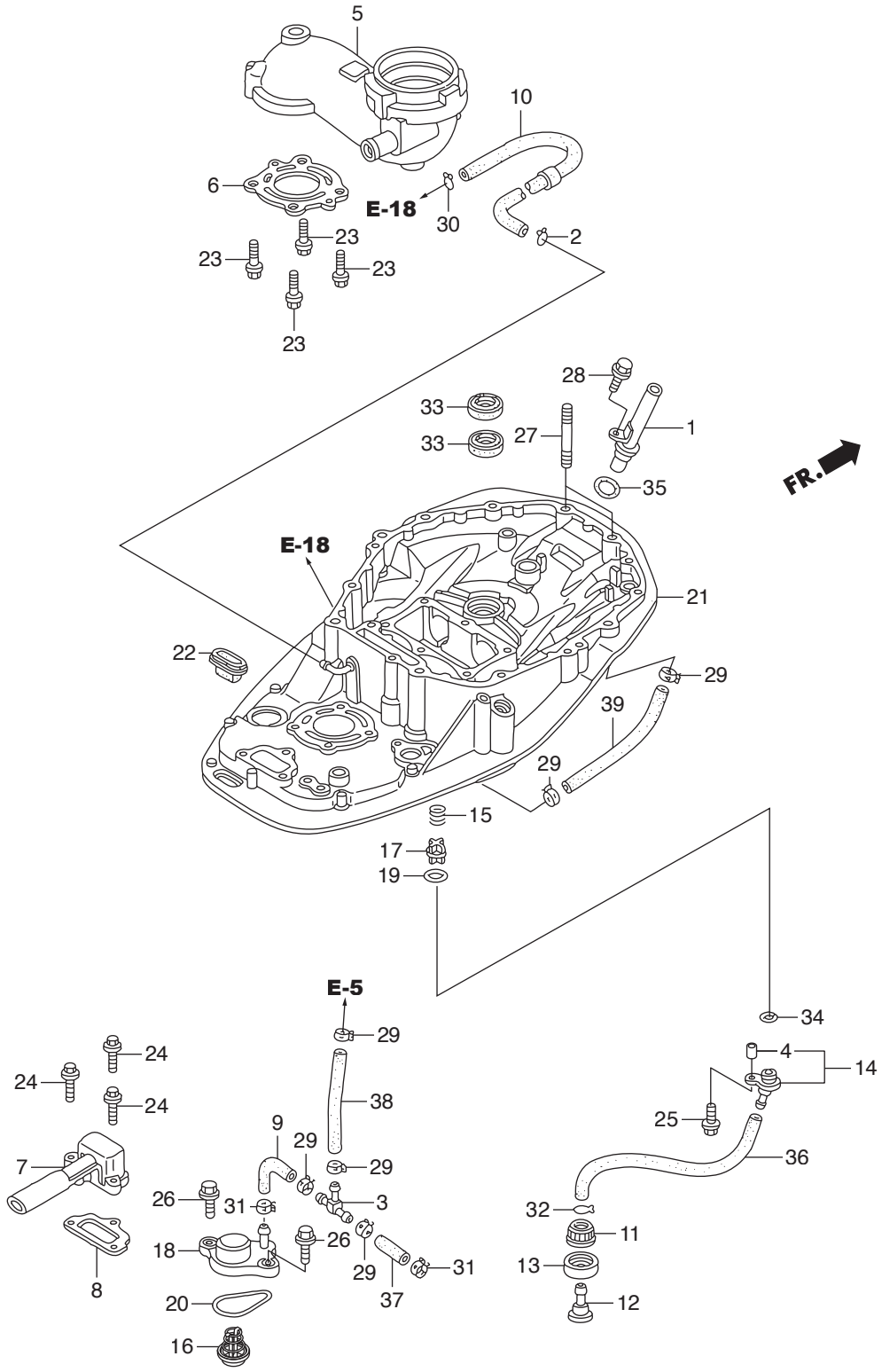
5
10
6
E-18
30
2
23
23
23
23
28
33
33
27
1
35
FR.
E-18
21
22
29
39
29
15
17
19
E-5
29
34
24
24
24
4
14
38
25
9
29
36
7
29
26
31
3
32
11
18
26
29
31
13
8
20
37
12
16

Ref.No.		Part No.	Description	Q'ty	Remarks
				BFT115A	
F-9	30	HZV0-90604-000	CLIP, TUBE(B12)	1	
F-9	31	HZY6-90606-003	CLAMP, TUBE(D10.5)	2	
F-9	32	HZY6-90651-000	CLIP B1, TUBE	1	
F-9	33	HZW5-91202-003	SEAL, WATER, 22X35X7	2	
F-9	34	H800-91303-000	O-RING, 16MM	1	
F-9	35	HPJ7-91309-010	O-RING, 11.5X3.5	1	
F-9	36	HCO-95001-80300-40	TUBE, FUEL, 8X300	1	(HC-95001-80001-60M)
F-9	37	HCO-95005-70040-30	TUBE, 7X40	1	(HC-95001-80001-30M)
F-9	38	HCO-95005-70160-30	TUBE, 7X160	1	(HC-95001-80001-30M)
F-9	39	HCO-95005-70200-30	TUBE, 7X200	1	(HC-95001-80001-30M)

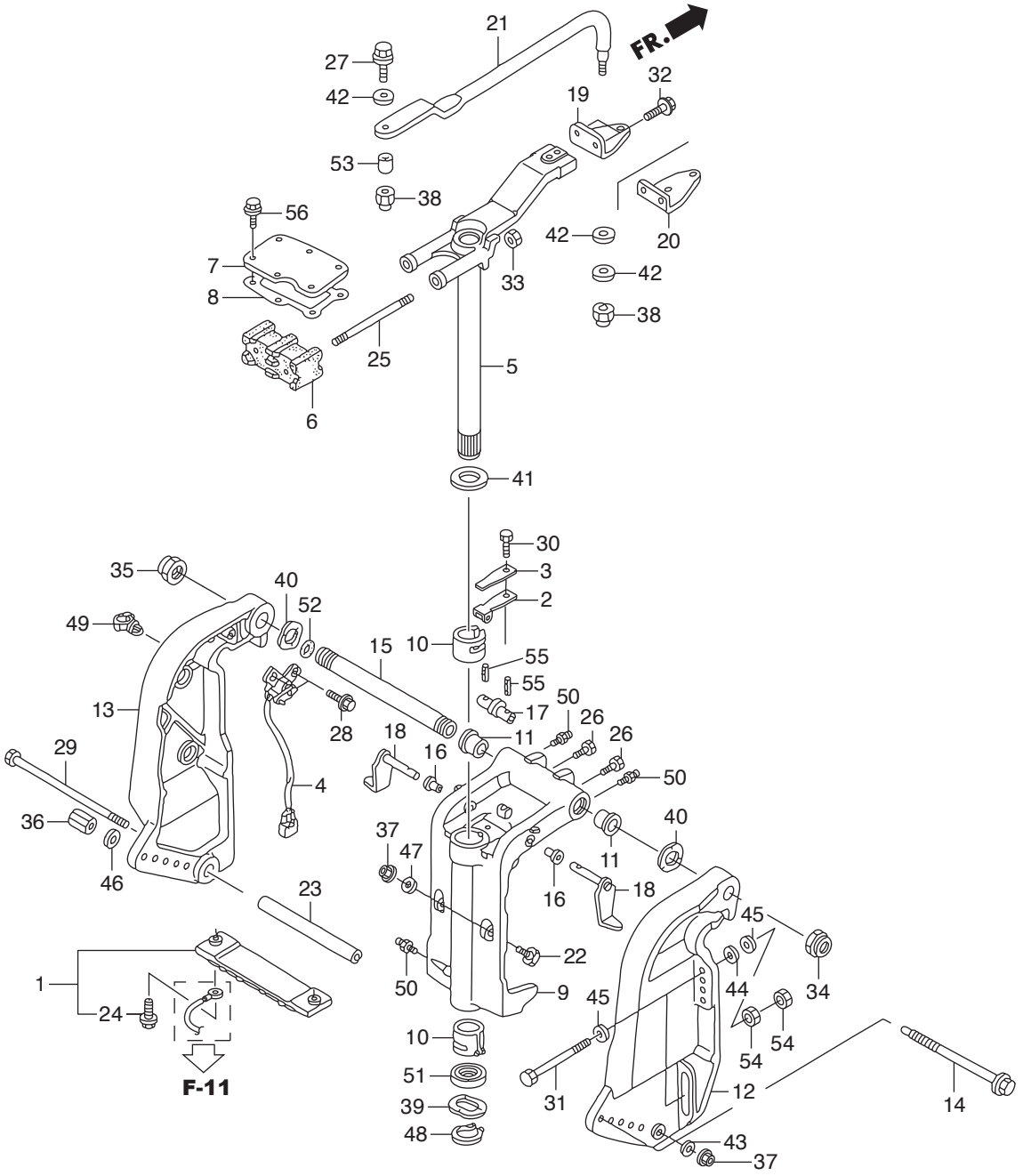
FR.
21
27
42
32
19
53
38
56
42
20
7
33
42
8
38
25
5
6
41
30
35
3
40
2
52
49
15
10
55
55
13
28
17
50
26
18
11
26
29
16
50
4
36
37
40
47
11
46
16
18
23
45
22
1
50
9
44
34
24
45
54
54
10
51
31
12
14
39
48
43
37
F-11

Ref.No.		Part No.	Description	Q'ty	Remarks
				BFT115A	
F-10	1	HZW1-06411-020	METAL KIT, ANODE	1	
F-10	2	HZV1-24210-010	SPRING COMP., CLICK	1	
F-10	3	HZV4-24221-010	SPRING, CLICK ASSIST	1	
F-10	4	HZY6-35660-013	SENSOR ASSY., TRIM ANGLE	1	
F-10	5	HZX1-50100-000	FRAME COMP., MOUNTING	1	
F-10	6	HZW5-50151-000	MOUNT COMP., UPPER RUBBER	1	
F-10	7	HZY6-50167-000	HOLDER, UPPER MOUNTING	1	
F-10	8	HZY6-50168-003	GASKET, UPPER MOUNTING HOLDER	1	
F-10	9	HZW1-50201-040ZC	CASE, SWIVEL	1	*T107* BAY BLUE
F-10	10	HZZ5-50211-000	LINER, SWIVEL CASE	2	
F-10	11	HZW1-50214-000	BUSH, SWIVEL CASE	2	
F-10	12	HZW1-50301-070ZC	BRACKET, R. STERN	1	*T107* BAY BLUE
F-10	13	HZW1-50311-070ZC	BRACKET, L. STERN	1	*T107* BAY BLUE
F-10	14	HZW5-50341-010	ROD, ADJUSTING	1	
F-10	15	HZY9-50381-000	SHAFT, TILTING	1	
F-10	16	HZV5-50522-000	BUSH, TILT ARM	2	
F-10	17	HZW1-50527-000	BRACKET, TILTING	1	
F-10	18	HZW1-50529-000	STOPPER, TILT	2	
F-10	19	HZW1-53234-010	PLATE, STEERING	1	
F-10	20	HZW5-53234-010	PLATE, STEERING	1	
F-10	21	HZW1-53238-010	ROD, STEERING	1	
F-10	22	HZW1-56516-000	RECEIVER, THRUST	2	
F-10	23	HZW1-56539-000	COLLAR, LOWER CYLINDER	1	
F-10	24	HZW9-90009-000	BOLT, FLANGE, 6X23	2	
F-10	25	HZW5-90101-000	BOLT, STUD, 12X150	2	
F-10	26	HZW1-90102-000	BOLT, 1/4-28UNF	2	
F-10	27	HZW1-90105-000	BOLT, 3/8-24UNF	1	
F-10	28	HZW9-90105-000	BOLT, FLANGE, 6X20	2	
F-10	29	HZW1-90108-000	BOLT, HEX., 10X235	1	

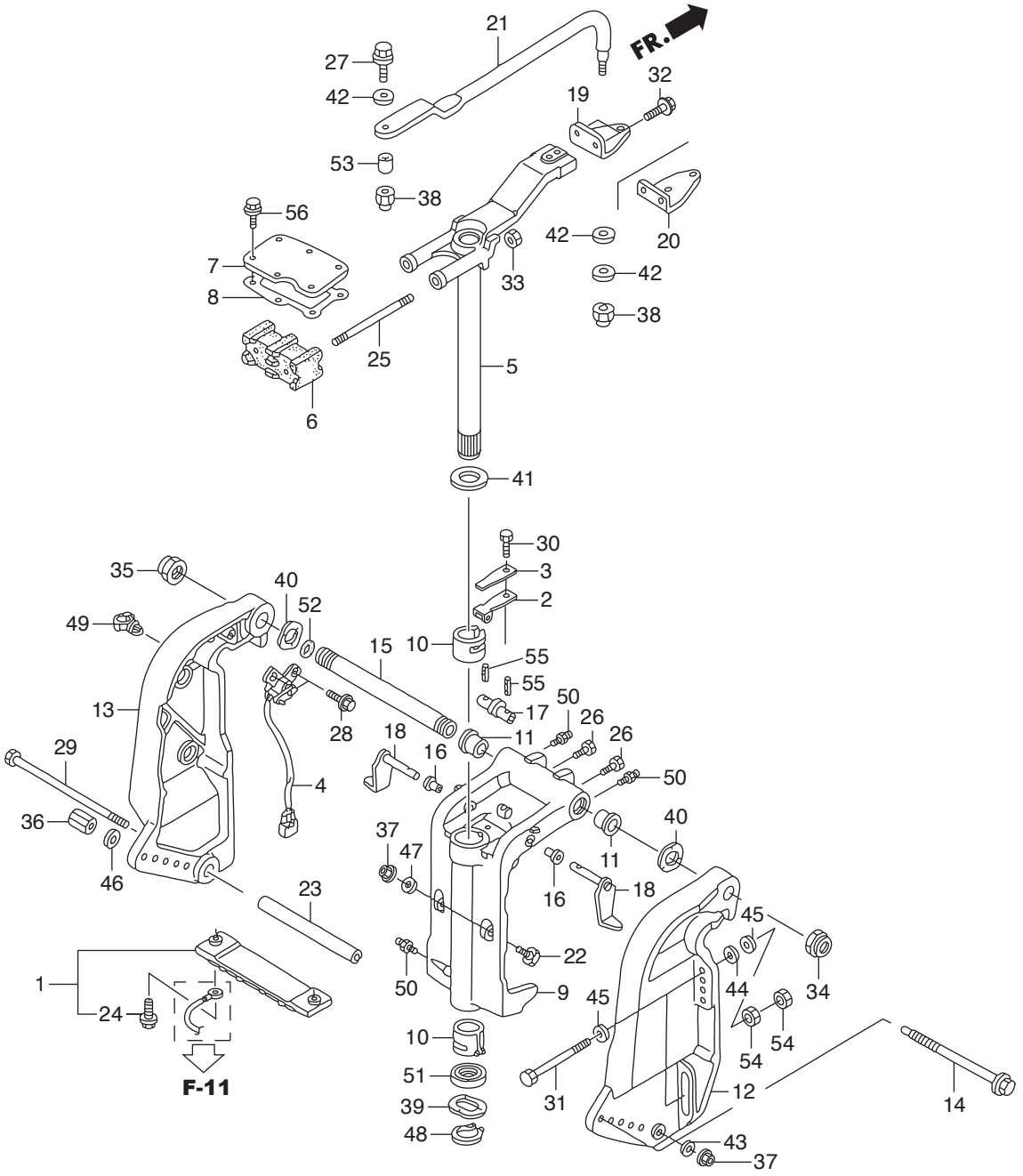
FR.
21
27
42
32
19
53
38
56
42
20
7
33
42
8
38
25
5
6
41
30
35
3
40
2
49
52
15
10
55
55
13
28
17
50
26
18
11
26
29
16
50
4
36
37
40
47
11
46
16
18
23
45
22
1
50
9
44
34
24
45
54
54
10
51
31
12
14
39
48
43
37
F-11

Ref.No.		Part No.	Description	Q'ty	Remarks
				BFT115A	
F-10	30	H881-90110-000	BOLT, HEX., 6X14	1	
F-10	31	HZZ3-90129-000	BOLT, HEX., 12X119	6	
F-10					
F-10		HZX2-90129-000	BOLT, HEX., 12X130	4	
F-10					
F-10	32	HZW9-90154-000	BOLT, FLANGE, 10X25	2	
F-10	33	HZW5-90302-003	NUT, FLANGE, 12MM	2	
F-10	34	HZV5-90304-013	NUT, SELF-LOCK(7/8-14UNF)	1	
F-10	35	HZW1-90304-013	NUT, SELF-LOCK(25X2.0)	1	
F-10	36	HZW5-90304-000	NUT, ADJUSTER ROD	1	
F-10	37	HZW4-90306-003	NUT, FLANGE, 10MM	3	
F-10	38	HZV5-90307-003	NUT, SELF-LOCK(3/8-24UNF)	2	
F-10	39	HZV5-90501-000	WASHER, WAVE, 40MM	1	
F-10	40	HZV5-90502-000	WASHER, WAVE, 26MM	2	
F-10	41	HZV5-90504-000	WASHER, THRUST, 34MM	1	
F-10	42	HZV4-90514-000	WASHER, 10MM	3	
F-10	43	H921-90511-000	WASHER, PLAIN, 10MM	1	
F-10	44	HZV5-90552-000	WASHER, PLAIN, 12MM	6	
F-10					
F-10					
F-10					
F-10	45	HZV5-90559-000	WASHER, PLAIN, 12MM	12	
F-10					
F-10					
F-10					
F-10	46	HZV5-90559-000	WASHER, PLAIN, 12MM	1	
F-10	47	HZV5-90563-000	WASHER, PLAIN, 10MM	2	
F-10	48	HZV5-90651-000	CIRCLIP, EXTERNAL, 39MM	1	
F-10	49	H763-90681-A01	CLIP, WIRE HARNESS	1	

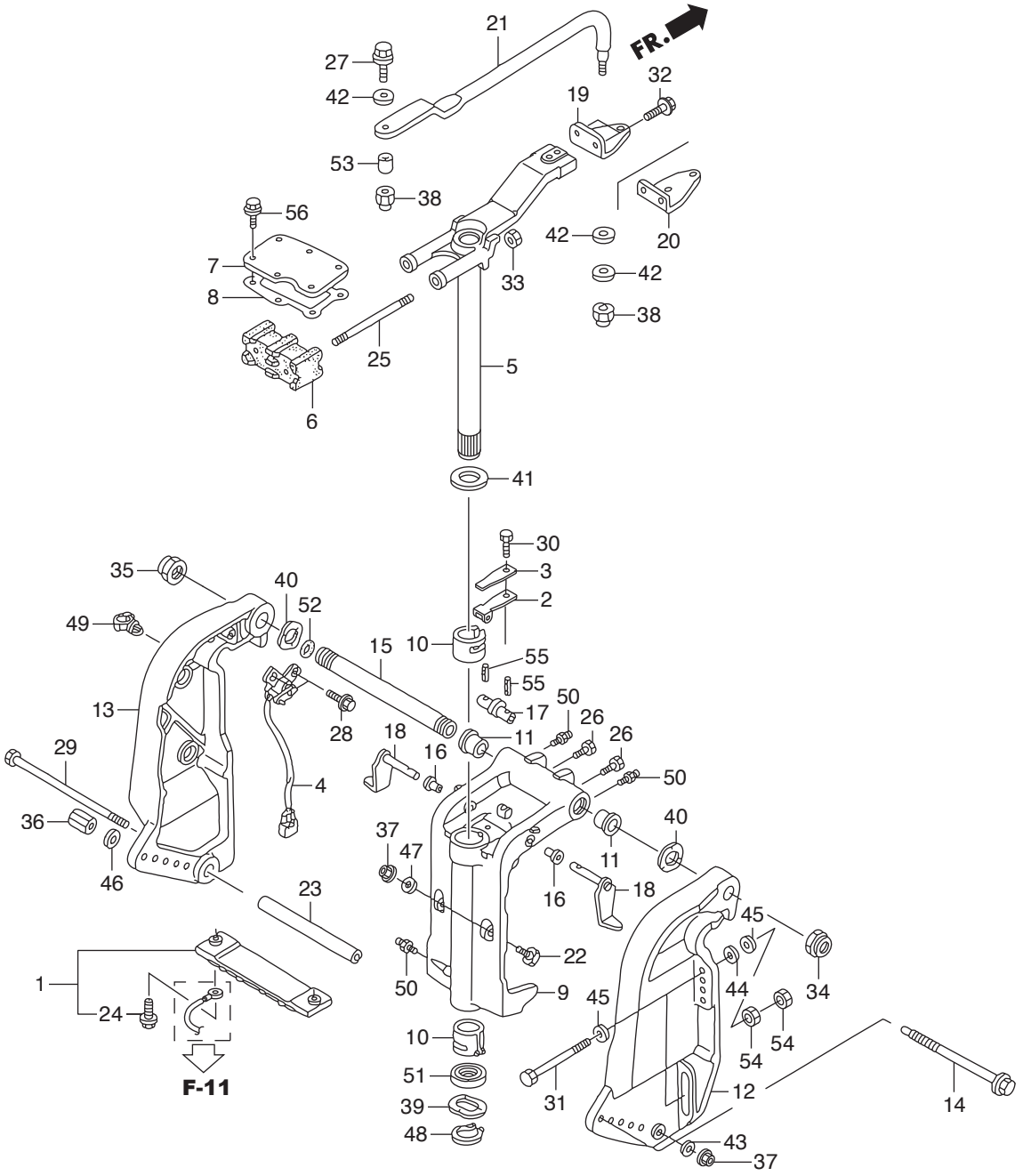
FR.
21
27
42
32
19
53
38
56
42
20
7
33
42
8
38
25
5
6
41
30
35
3
40
2
49
52
15
10
55
55
13
28
17
50
26
18
11
26
29
16
50
4
36
37
40
47
11
46
16
18
23
45
22
1
50
9
44
34
24
45
54
54
10
51
31
12
14
39
48
43
37
F-11

Ref.No.		Part No.	Description	Q'ty	Remarks
				BFT115A	
F-10	50	HZV7-90951-010	NIPPLE, GREASE	3	
F-10	51	HZV5-91256-003	OIL SEAL, 39.5X52X6(ARAI)	1	
F-10	52	HZV5-91352-000	O-RING, 15.54X2.26	1	
F-10	53	HZV5-91560-000	COLLAR, STEERING ROD	1	
F-10	54	HCO-94001-12490-0S	NUT, HEX., 12MM	12	
F-10					
F-10					
F-10					
F-10	55	HCO-94305-25203	PIN, SPRING, 2.5X20	2	
F-10	56	HCO-95801-08035-09	BOLT, FLANGE, 8X35	6	

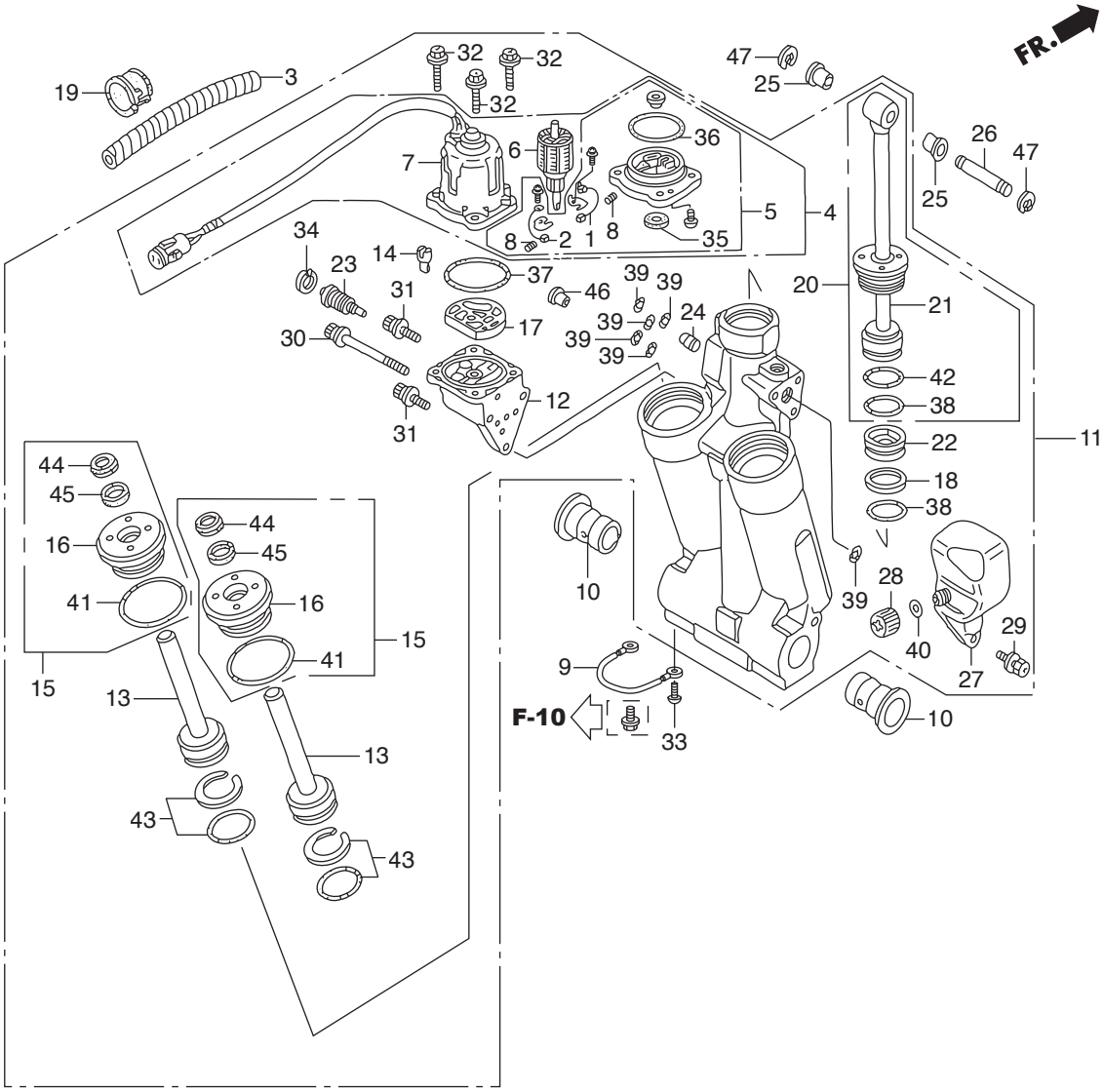
FR.
32
32
32
47
25
19
3
36
26
47
7
6
25
5
4
8
2
1
8
35
34
14
23
37
39
39
46
20
31
21
24
17
30
39
39
39
42
12
38
31
22
11
44
18
45
38
44
16
45
10
28
39
16
41
40
29
41
15
27
15
9
13
F-10
33
10
13
43
43

Ref.No.		Part No.	Description	Q'ty BFT115A	Remarks
F-11	1	HZY3-30280-003	BREAKER ASSY.	1	
F-11	2	HZY3-31106-003	BRUSH ASSY.	1	
F-11	3	HZV5-36104-821	TUBE, SPIRAL	1	
F-11	4	HZY6-36120-013	MOTOR ASSY., POWER TILT	1	
F-11	5	HZY3-36122-013	BRACKET ASSY.	1	
F-11	6	HZY3-36123-013	ARMATURE COMP.	1	
F-11	7	HZY6-36129-013	YOKE ASSY.	1	
F-11	8	HZV5-36136-821	SPRING, MOTOR	2	
F-11	9	HZY3-40219-013	WIRE, LEAD(1.5X116MM)	1	
F-11	10	HZV5-50214-003	BUSH, SWIVEL CASE	2	
F-11	11	HZY6-56000-043	TRIM-TILT ASSY., POWER	1	LD,LU,XU
F-11					
F-11					
F-11					
F-11	12	HZY6-56100-013	PUMP ASSY.	1	LD,LU,XU
F-11					
F-11					
F-11					
F-11	13	HZW1-56110-701	ROD COMP., PISTON(B)	2	
F-11	14	HZW1-56113-701	JOINT, DRIVE	1	
F-11	15	HZW1-56115-305	GUIDE COMP., ROD	2	
F-11	16	HZY9-56115-003	GUIDE COMP., ROD	2	
F-11	17	HZW1-56116-701	FILTER B	1	
F-11	18	HZV5-56117-821	RING, BACK UP	1	
F-11	19	HZV5-56118-820	BUSH, MOTOR CODE	1	
F-11	20	HZW1-56120-305	ROD COMP., PISTON	1	
F-11	21	HZY9-56120-003	ROD COMP., PISTON	1	
F-11	22	HZW1-56130-702	PISTON COMP., FREE	1	
F-11	23	HZY3-56170-013	VALVE COMP., MANUAL	1	

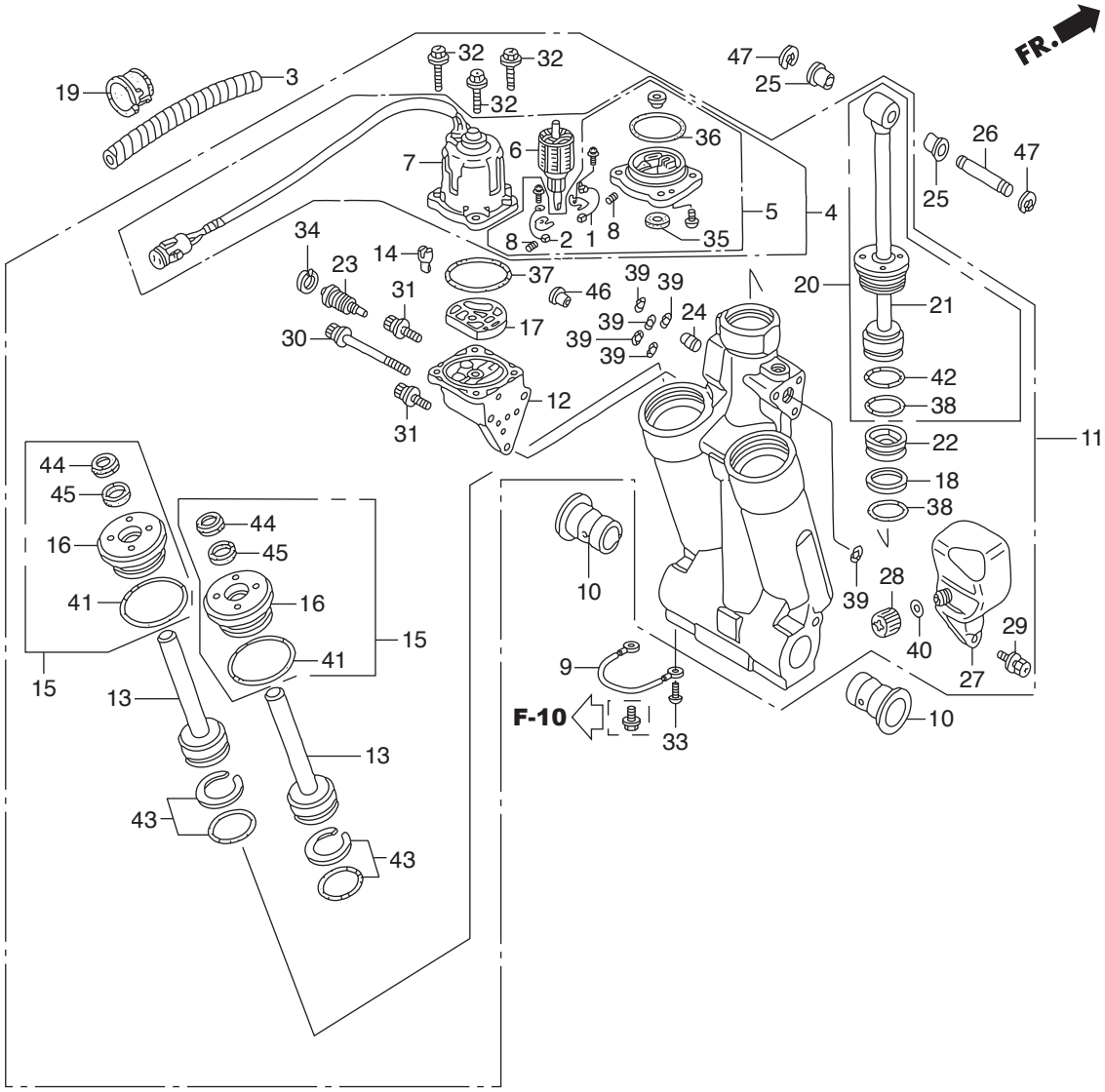
FR.
32
32
32
47
25
19
3
36
26
47
7
6
25
5
4
8
2
1
8
35
34
14
23
37
39
39
20
31
46
21
17
24
30
39
39
39
42
12
38
31
22
11
44
18
45
38
44
16
45
10
28
39
16
41
40
29
41
15
27
15
9
13
F-10
33
10
13
43
43

Ref.No.		Part No.	Description	Q'ty	Remarks
				BFT115A	
F-11	24	HZW1-56180-701	VALVE COMP., RESERVOIR	1	
F-11	25	HZV5-56513-000	BUSH, LOWER CYLINDER	2	
F-11	26	HZW1-56532-000	PIN, UPPER CYLINDER	1	
F-11	27	HZW1-56851-703	TANK, OIL	1	
F-11	28	HZW1-56860-701	CAP COMP., OIL TANK	1	
F-11	29	HZW1-90113-702	BOLT, RECESSED	3	
F-11	30	HZW1-90114-702	BOLT, SOCKET(A)	1	
F-11	31	HZW1-90115-702	BOLT, SOCKET(B)	2	
F-11	32	HZW1-90116-702	BOLT, HEX.	4	
F-11	33	HZV5-90119-000	SCREW, PAN, 6X8	1	
F-11	34	HZW1-90652-702	CIRCLIP, INTERNAL	1	
F-11	35	HZV5-91203-821	OIL SEAL	1	
F-11	36	HZW1-91207-013	O-RING, 2.0X70.5	1	
F-11	37	HZV5-91302-821	O-RING, 1.8X69.6	1	
F-11	38	HZV5-91316-821	O-RING, 3.5X38.7	2	
F-11	39	HZW1-91352-702	O-RING, 1.8X7.7	6	
F-11	40	HZW1-91353-703	O-RING, 1.9X11	1	
F-11	41	HZW1-91354-701	O-RING, 3.5X35.7	2	
F-11	42	HZW1-91355-701	O-RING, 3.5X41.7	1	
F-11	43	HZW1-91357-701	O-RING SET, 3.5X31.7	2	
F-11	44	HZW1-91358-701	SEAL, WATER	2	
F-11	45	HZW1-91361-701	PACKING	2	
F-11	46	HZW1-91557-701	COLLAR, ORIFICE	1	
F-11	47	HCO-94540-15029	E-RING, 15MM	2	

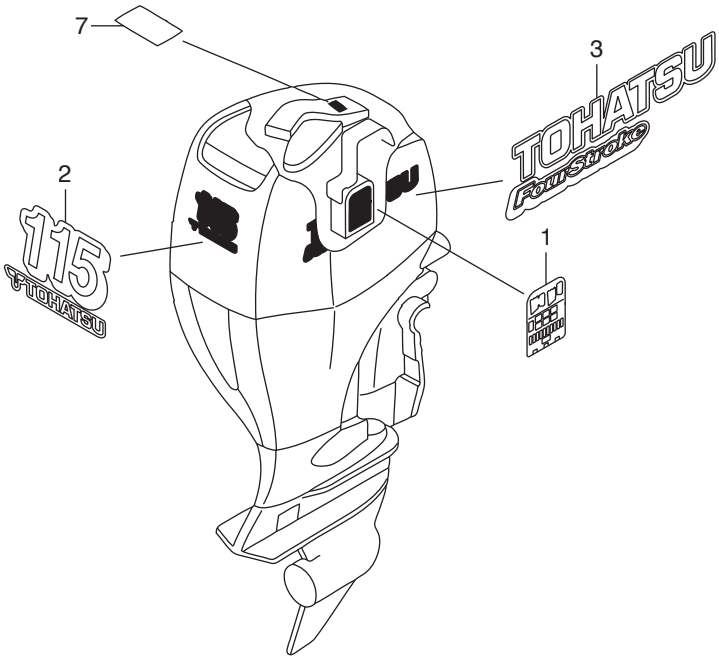
7
3
TOHATSU
FourStroke
2
115
TOHATSU
1

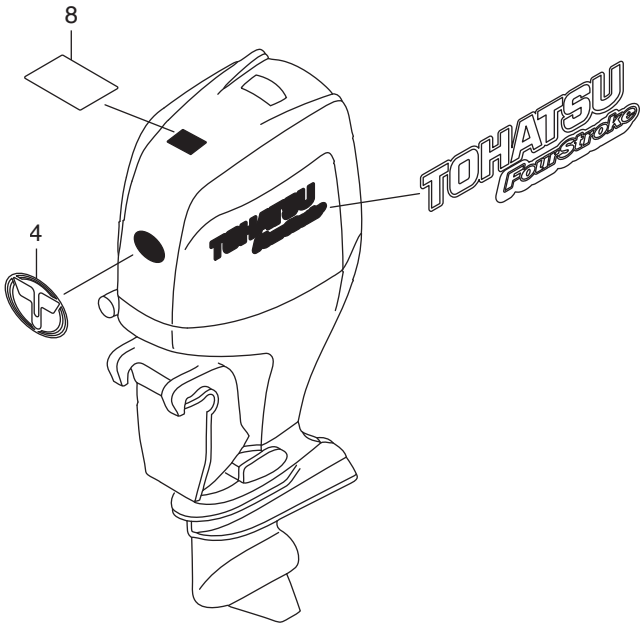
8
TOHATSU
FourStroke
4

Ref.No.		Part No.	Description	Q'ty	Remarks
				BFT115A	
F-12	1	HZY6-87117-640	LABEL, FUSE	1	LD
F-12		HZY6-87117-U80	LABEL, FUSE(EU)	1	LU,XU
F-12	2	HZX1-87121-R00	MARK, RR.(BFT115A)	1	
F-12	3	HZX1-87132-R00	MARK, R. SIDE STRIPE(BFT115A)	2	
F-12					
F-12					
F-12					
F-12	7	HZH8-87522-W41	MARK, CAUTION(PICTOGRAPH)	1	LD,XCD,XD
F-12	8	HZY6-87531-620	LABEL, OIL CAUTION(EF)	1	
F-12					
F-12					
F-12					
F-12					

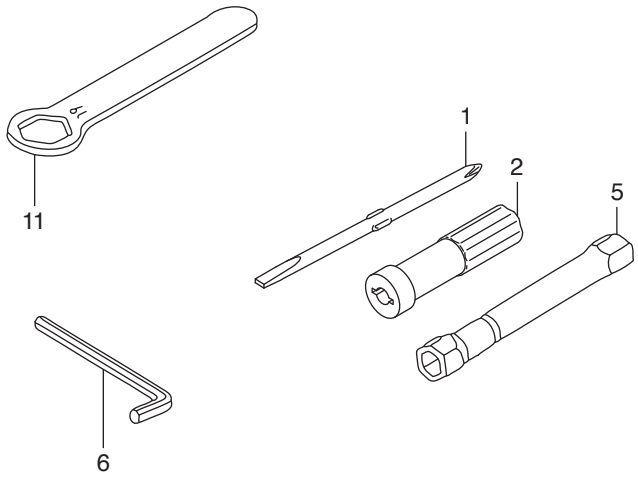
1
2
5
11
6

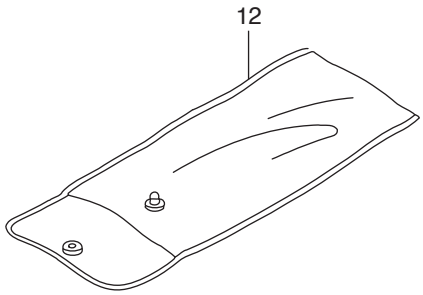
12

Ref.No.		Part No.	Description	Q'ty BFT115A	Remarks
F-13	1	H538-89102-000	DRIVER, SCREW(NO.2 + -)	1	
F-13	2	H538-89103-000	GRIP	1	
F-13					
F-13					
F-13	5	HZY6-89216-000	WRENCH, PLUG	1	
F-13	6	H460-89221-840	WRENCH, HEX., 6MM	1	
F-13					
F-13					
F-13					
F-13					
F-13	11	HCO-99006-19000	WRENCH, EYE, 19MM	1	
F-13	12	HCO-99008-02300	BAG, TOOL, 230MM	1	

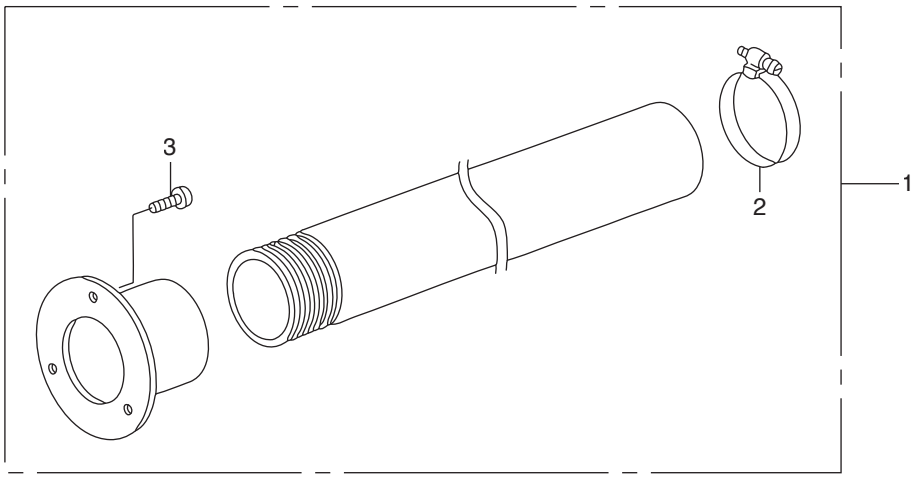
3
2
1

Ref.No.		Part No.	Description	Q'ty	Remarks
				BFT115A	
FOP-1	1	HZY3-06177-U02	HOSE KIT, RIGGING	1	
FOP-1	2	HZY3-17748-U01	CLAMP	1	
FOP-1	3	HZY3-17749-U01	SCREW, TAPPING	3	

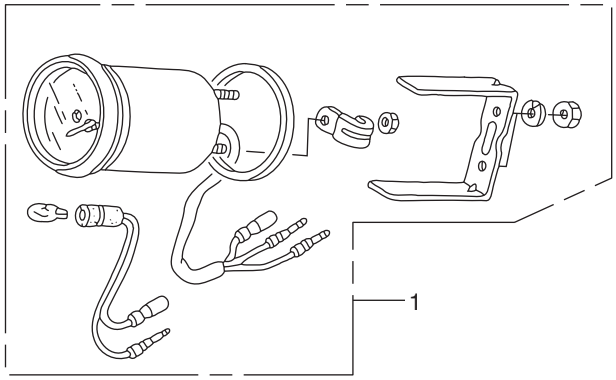
1

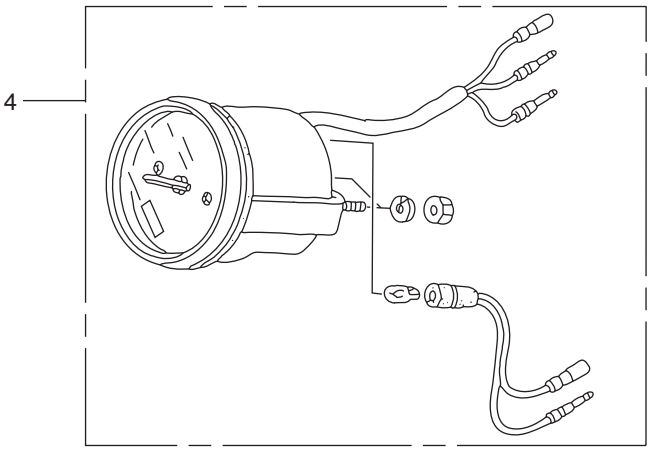
4

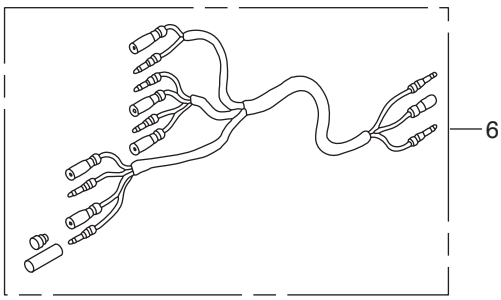
6

Ref.No.		Part No.	Description	Q'ty BFT115A	Remarks
FOP-2	1	3PV-72571-0	TRIM METER ASSY (BLACK)	1	
FOP-2					
FOP-2					
FOP-2	4	3PV-72637-0	TACHOMETER HOUR METER (BLACK)	1	
FOP-2					
FOP-2	6	3PU-72537-0	METER LEAD WIRE	1	

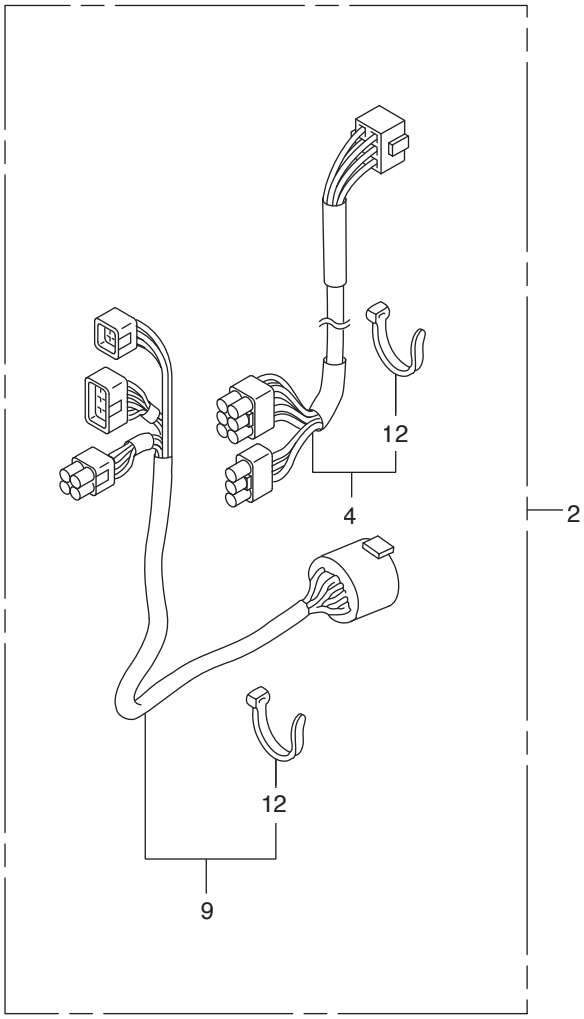
12
4
2
12
9

Ref.No.		Part No.	Description	Q'ty BFT115A	Remarks
FOP-6					
FOP-6					
FOP-6	2	HZZ5-06325-600	CABLE SET, PANEL INDICATOR	1	(20FT)
FOP-6		HZZ5-06325-700	CABLE SET, PANEL INDICATOR	1	(25FT)
FOP-6		HZZ5-06325-800	CABLE SET, PANEL INDICATOR	1	(30FT)
FOP-6					
FOP-6	4	HZZ5-32185-600	CORD ASSY., INDICATOR(20FT)	1	
FOP-6		HZZ5-32185-700	CORD ASSY., INDICATOR(25FT)	1	
FOP-6		HZZ5-32185-800	CORD ASSY., INDICATOR(30FT)	1	
FOP-6					
FOP-6					
FOP-6					
FOP-6					
FOP-6					
FOP-6					
FOP-6	9	HZZ5-32580-600	CABLE ASSY., SWITCH PANEL	1	(20FT)
FOP-6		HZZ5-32580-700	CABLE ASSY., SWITCH PANEL	1	(25FT)
FOP-6		HZZ5-32580-800	CABLE ASSY., SWITCH PANEL	1	(30FT)
FOP-6					
FOP-6					
FOP-6	12	H952-32901-770	TIE, CABLE(NATURAL)(2.4X92)	6	
FOP-6					
FOP-6					
FOP-6					
FOP-6					
FOP-6					
FOP-6					
FOP-6					
FOP-6					

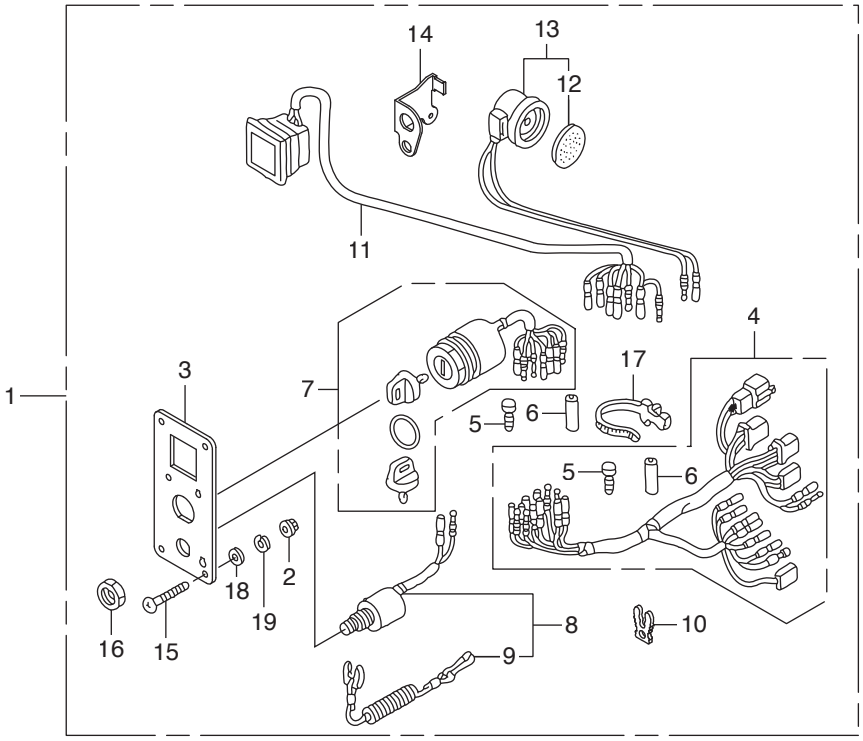
14
13
12
11
4
17
3
7
1
5
6
5
6
2
18
19
16
15
8
10
9

Ref.No.		Part No.	Description	Q'ty BFT115A	Remarks
FOP-6-1	1	HZZ3-06323-R30	PANEL KIT, SWITCH(4-LED)	1	LD
FOP-6-1		HZZ3-06323-R10	PANEL KIT, SWITCH(4-LED) (EU)	1	LU,XU
FOP-6-1	2	HMT8-18334-770	NUT, FLANGE, 5MM	4	
FOP-6-1	3	HZZ3-32346-R31	PANEL, CONTROL	1	LD
FOP-6-1		HZZ3-32346-R11	PANEL, CONTROL	1	LU,XU
FOP-6-1	4	HZZ5-32545-000	HARNESS ASSY., SWITCH PANEL	1	
FOP-6-1	5	HZV5-32823-003	PLUG, INNER CONNECTOR	8	
FOP-6-1	6	HZV5-32824-003	PLUG, OUTER CONNECTOR	3	
FOP-6-1	7	HZZ3-35100-R11	SWITCH ASSY., COMBINATION	1	
FOP-6-1	8	HZV5-36180-033	SWITCH ASSY., EMERGENCY STOP	1	
FOP-6-1	9	HZV4-36182-651	CORD COMP., EMERGENCY	1	
FOP-6-1	10	HZV4-36187-652	CLIP, EMERGENCY LOCK	1	
FOP-6-1	11	HZZ5-37210-712	LAMP ASSY., INDICATION(4-LED)	1	
FOP-6-1	12	H341-38403-672	PLATE, WINKER BUZZER	1	
FOP-6-1	13	HZV5-38410-003	BUZZER COMP., WARNING	1	
FOP-6-1	14	HZZ5-38414-003	BRACKET, BUZZER	1	
FOP-6-1	15	HZW5-90109-000	SCREW, PAN, 5X40	4	
FOP-6-1	16	H921-90302-000	NUT, HEX., 16MM	1	
FOP-6-1	17	HSC2-90649-003	BAND, WIRE HARNESS(NATURAL)	1	(150MM)
FOP-6-1	18	HCO-94103-05400	WASHER, PLAIN, 5MM	4	
FOP-6-1	19	HCO-94111-05400	WASHER, SPRING, 5MM	4	

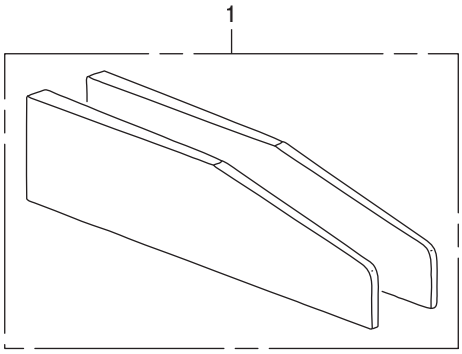
1

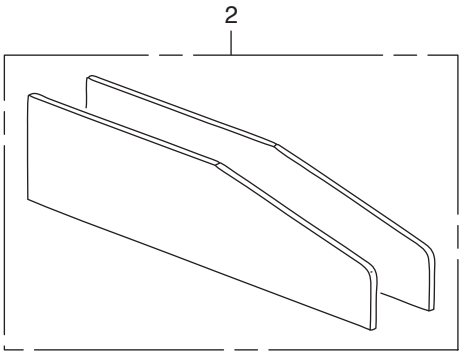
2

Ref.No.		Part No.	Description	Q'ty	Remarks
				BFT115A	
FOP-7	1	HZY3-50388-U00	PLATE SET, TRIM ADJUST	1	(15MM TAPER)
FOP-7	2	HZY3-50388-U10	PLATE SET, TRANSOM(5.5MM FLAT)	1	

REMOTE CONTROL (TOP MOUNT SINGLE TYPE) (RIGHT)

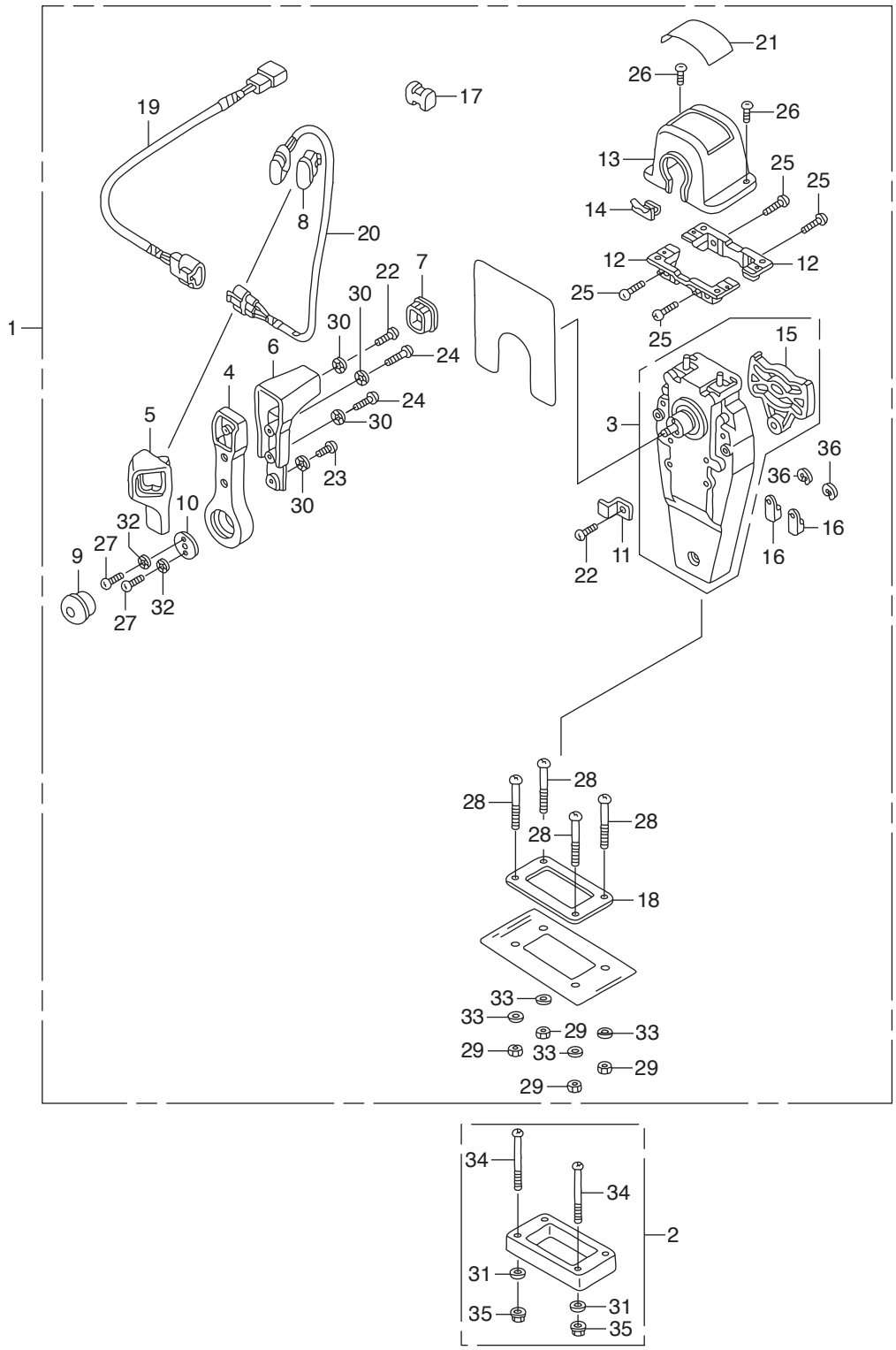

Ref.No.		Part No.	Description	Q'ty	Remarks
				BFT115A	
FOP-8	1	HZZ3-06240-R30	BOX KIT, REMOTE CONTROL	1	(TOP MOUNT SINGLE)(R.)
FOP-8	2	HZW5-06241-U00	SPACER KIT, REMOTE CONTROL BOX	1	(TOP MOUNT SINGLE)
FOP-8	3	HZW5-24810-U01	HOUSING ASSY., L. INNER	1	(TOP MOUNT)
FOP-8	4	HZW5-24811-U01	HANDLE, REMOTE CONTROL	1	
FOP-8	5	HZW5-24812-U01	COVER, L. GRIP	1	
FOP-8	6	HZW5-24813-U01	GRIP, REMOTE CONTROL HANDLE	1	
FOP-8	7	HZW5-24814-U01	CAP, GRIP	1	
FOP-8	8	HZW5-24815-U01	CAP, SWITCH	1	
FOP-8	9	HZW5-24816-U01	BUTTON, THROTTLE	1	
FOP-8	10	HZW5-24817-U01	PLATE, HANDLE	1	
FOP-8	11	HZW5-24818-U01	PLATE, CABLE CLAMP	1	
FOP-8	12	HZW5-24819-U01	BRACKET, REMOTE CONTROL	2	HOUSING
FOP-8	13	HZW5-24820-U01	HOUSING COMP., REMOTE CONTROL	1	BOX
FOP-8	14	HZW5-24825-U01	HOUSING, LEAD	1	
FOP-8	15	HZW5-24826-U01	PLATE, DWELL	1	
FOP-8	16	HZW5-24831-U01	TERMINAL, CABLE	2	
FOP-8	17	HZW5-24832-U01	SPACER, CABLE CLAMP	1	
FOP-8	18	HZW5-24834-U01	PACKING, SINGLE	1	
FOP-8	19	HZW7-32530-U00	SUB HARNESS ASSY., POWER	1	TRIM-TILT(A)
FOP-8	20	HZW5-35370-U02	SWITCH ASSY., POWER TRIM-TILT	1	(A)
FOP-8	21	HZZ3-87703-R81	MARK, REMOTE CONTROL(SINGLE)	1	
FOP-8	22	HZW5-90101-U00	SCREW, PAN, 5X16	2	
FOP-8	23	HZW5-90102-U00	SCREW, PAN, 5X10	1	
FOP-8	24	HZW5-90103-U01	SCREW, PAN, 5X20	2	
FOP-8	25	HZW5-90104-U00	SCREW, PAN, 5X18	4	
FOP-8	26	HZW5-90105-U01	SCREW, PAN, 4X10	2	
FOP-8	27	HZW5-90106-U00	SCREW, PAN, 6X18	2	
FOP-8	28	HZW5-90107-U00	SCREW, PAN, 5X40	4	
FOP-8	29	HZW5-90301-U00	NUT, HEX., 5MM	4	

FOP-8 REMOTE CONTROL
(TOP MOUNT SINGLE TYPE) (RIGHT)

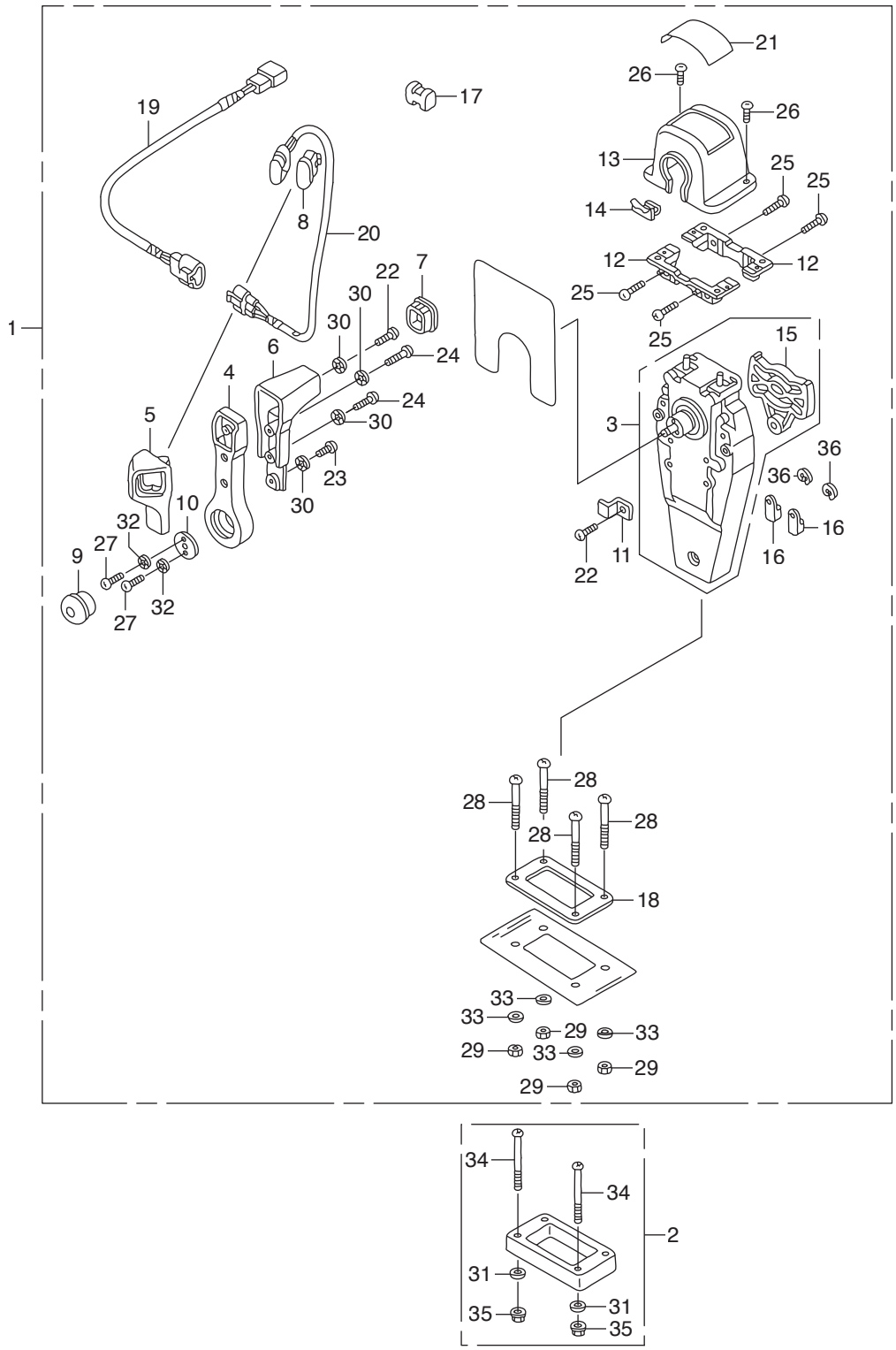

Ref.No.		Part No.	Description	Q'ty	Remarks
				BFT115A	
FOP-8	30	HZW5-90501-U00	WASHER, LOCK, 5MM	4	
FOP-8	31	HZV4-90502-000	WASHER, PLAIN, 5MM	4	
FOP-8	32	HZW5-90502-U00	WASHER, LOCK, 6MM	2	
FOP-8	33	HZW5-90503-U00	WASHER, PLAIN, 5MM	4	
FOP-8	34	HCO-93500-05065-4J	SCREW, PAN, 5X65	4	
FOP-8	35	HCO-94001-05490-0S	NUT, HEX., 5MM	4	
FOP-8	36	HCO-94540-06029	E-RING, 6MM	2	

FOP-8-2 REMOTE CONTROL (TOP MOUNT DUAL TYPE) (RIGHT)

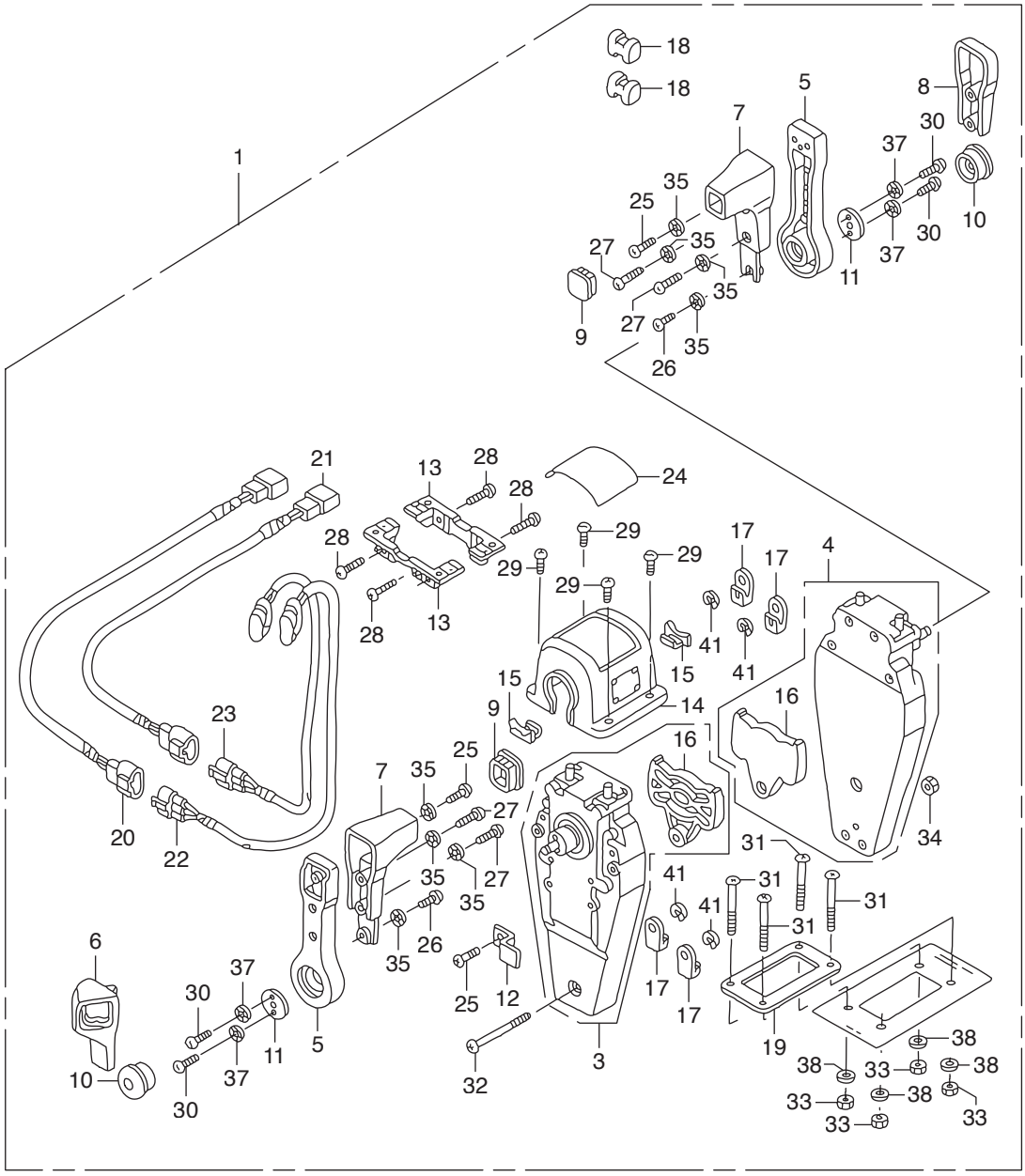

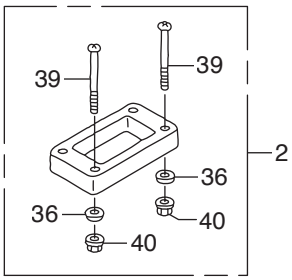

Ref.No.		Part No.	Description	Q'ty	Remarks
				BFT115A	
FOP-8-2	1	HZZ3-06240-R60	BOX KIT, REMOTE CONTROL	1	(TOP MOUNT DUAL)(R.)
FOP-8-2	2	HZW5-06241-U10	SPACER KIT, REMOTE CONTROL BOX	1	(TOP MOUNT DUAL)
FOP-8-2	3	HZW5-24810-U01	HOUSING ASSY., L. INNER	1	(TOP MOUNT)
FOP-8-2	4	HZW5-24810-U11	HOUSING ASSY., R. INNER	1	(TOP MOUNT)
FOP-8-2	5	HZW5-24811-U01	HANDLE, REMOTE CONTROL	2	
FOP-8-2	6	HZW5-24812-U01	COVER, L. GRIP	1	
FOP-8-2	7	HZW5-24813-U01	GRIP, REMOTE CONTROL HANDLE	2	
FOP-8-2	8	HZW5-24813-U21	COVER, DUAL GRIP	1	
FOP-8-2	9	HZW5-24814-U01	CAP, GRIP	2	
FOP-8-2	10	HZW5-24816-U01	BUTTON, THROTTLE	2	
FOP-8-2	11	HZW5-24817-U01	PLATE, HANDLE	2	
FOP-8-2	12	HZW5-24818-U01	PLATE, CABLE CLAMP	1	
FOP-8-2	13	HZW5-24819-U01	BRACKET, REMOTE CONTROL	2	HOUSING
FOP-8-2	14	HZW5-24820-U21	HOUSING COMP., DUAL REMOTE	1	CONTROL BOX
FOP-8-2	15	HZW5-24825-U01	HOUSING, LEAD	2	
FOP-8-2	16	HZW5-24826-U01	PLATE, DWELL	2	
FOP-8-2	17	HZW5-24831-U01	TERMINAL, CABLE	4	
FOP-8-2	18	HZW5-24832-U01	SPACER, CABLE CLAMP	2	
FOP-8-2	19	HZW5-24834-U21	PACKING, DUAL	1	
FOP-8-2	20	HZW7-32530-U00	SUB HARNESS ASSY., POWER	1	TRIM-TILT(A)
FOP-8-2	21	HZW7-32530-U10	SUB HARNESS ASSY., POWER	1	TRIM-TILT(B)
FOP-8-2	22	HZW5-35370-U02	SWITCH ASSY., POWER TRIM-TILT	1	(A)
FOP-8-2	23	HZW5-35370-U12	SWITCH ASSY., POWER TRIM-TILT	1	(B)
FOP-8-2	24	HZZ3-87703-R01	MARK, REMOTE CONTROL(DUAL)	1	
FOP-8-2	25	HZW5-90101-U00	SCREW, PAN, 5X16	3	
FOP-8-2	26	HZW5-90102-U00	SCREW, PAN, 5X10	2	
FOP-8-2	27	HZW5-90103-U01	SCREW, PAN, 5X20	4	
FOP-8-2	28	HZW5-90104-U00	SCREW, PAN, 5X18	4	
FOP-8-2	29	HZW5-90105-U01	SCREW, PAN, 4X10	4	

FOP-8-2 REMOTE CONTROL (TOP MOUNT DUAL TYPE) (RIGHT)

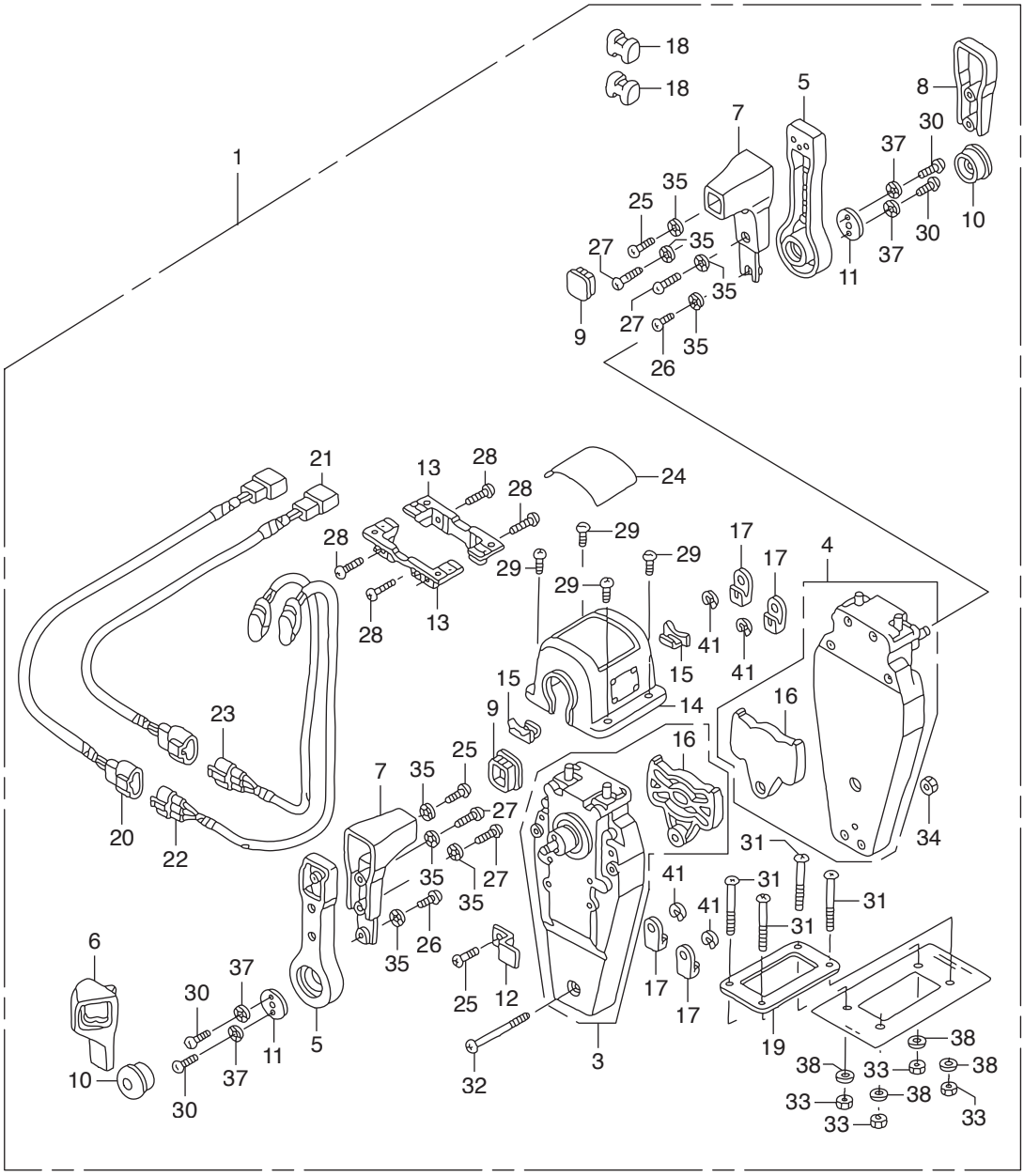

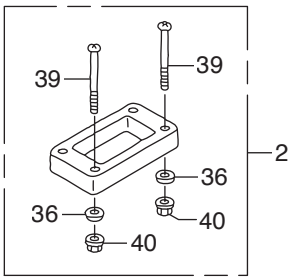

Ref.No.		Part No.	Description	Q'ty	Remarks
				BFT115A	
FOP-8-2	30	HZW5-90106-U00	SCREW, PAN, 6X18	4	
FOP-8-2	31	HZW5-90107-U00	SCREW, PAN, 5X40	4	
FOP-8-2	32	HZW5-90108-U00	SCREW, PAN, 5X55	1	
FOP-8-2	33	HZW5-90301-U00	NUT, HEX., 5MM	4	
FOP-8-2	34	HZW5-90302-U21	NUT, HEX., 5MM	1	
FOP-8-2	35	HZW5-90501-U00	WASHER, LOCK, 5MM	8	
FOP-8-2	36	HZV4-90502-000	WASHER, PLAIN, 5MM	4	
FOP-8-2	37	HZW5-90502-U00	WASHER, LOCK, 6MM	4	
FOP-8-2	38	HZW5-90503-U00	WASHER, PLAIN, 5MM	4	
FOP-8-2	39	HCO-93500-05065-4J	SCREW, PAN, 5X65	4	
FOP-8-2	40	HCO-94001-05490-0S	NUT, HEX., 5MM	4	
FOP-8-2	41	HCO-94540-06029	E-RING, 6MM	4	

FOP-8-4 REMOTE CONTROL (FLUSH MOUNT TYPE) (RIGHT)

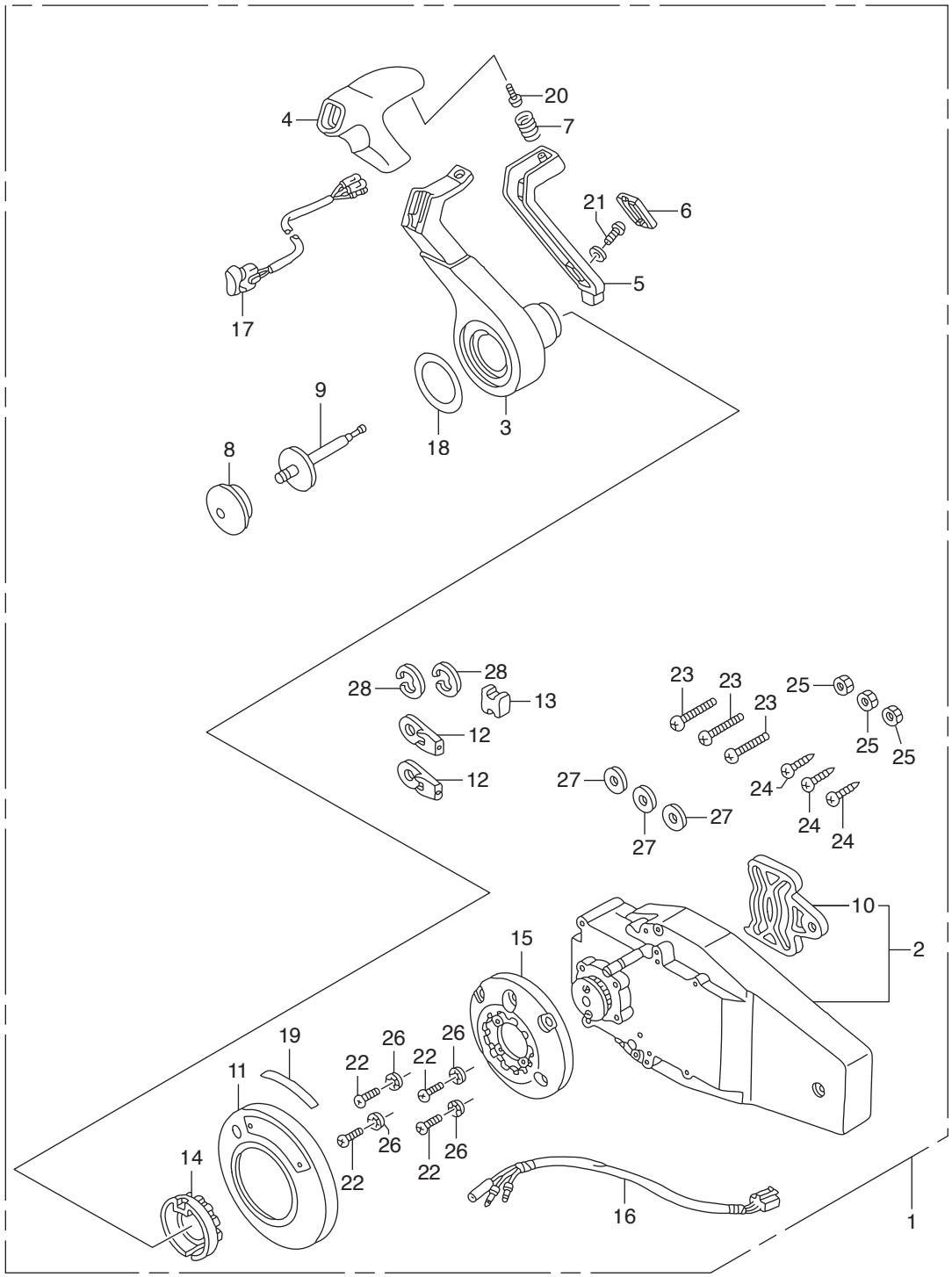

Ref.No.		Part No.	Description	Q'ty BFT115A	Remarks
FOP-8-4	1	HZZ3-06240-R40	BOX KIT, REMOTE CONTROL	1	(FLUSH MOUNT)(R.)
FOP-8-4	2	HZW7-24810-U01	HOUSING ASSY., R. INNER	1	(FLUSH MOUNT)
FOP-8-4	3	HZW7-24811-U01	HANDLE, REMOTE CONTROL	1	
FOP-8-4	4	HZW7-24812-U01	COVER, GRIP	1	
FOP-8-4	5	HZW7-24813-U01	ARM, NEUTRAL LOCK	1	
FOP-8-4	6	HZW7-24814-U01	COVER, LOCK ARM	1	
FOP-8-4	7	HZW7-24815-U01	SPRING, NEUTRAL LOCK ARM	1	
FOP-8-4	8	HZW5-24816-U01	BUTTON, THROTTLE	1	
FOP-8-4	9	HZW7-24817-U01	SHAFT, THROTTLE BUTTON	1	
FOP-8-4	10	HZW5-24826-U01	PLATE, DWELL	1	
FOP-8-4	11	HZW7-24830-U01	COVER ASSY.	1	
FOP-8-4	12	HZW5-24831-U01	TERMINAL, CABLE	2	
FOP-8-4	13	HZW5-24832-U01	SPACER, CABLE CLAMP	1	
FOP-8-4	14	HZW7-24832-U01	HOLDER, NEUTRAL LOCK	1	
FOP-8-4	15	HZW7-24833-U01	BASE	1	
FOP-8-4	16	HZW7-32530-U20	SUB HARNESS ASSY., POWER	1	TRIM-TILT(C)
FOP-8-4	17	HZW7-35370-U02	SWITCH ASSY., POWER TRIM-TILT	1	(C)
FOP-8-4	18	HZW7-87701-U01	MARK, HANDLE FLUSH MOUNT	1	
FOP-8-4	19	HZW7-87703-U00	MARK, FLUSH MOUNT	1	
FOP-8-4	20	HZW5-90101-U00	SCREW, PAN, 5X16	1	
FOP-8-4	21	HZW7-90101-U01	SCREW, TRUSS, 4X12	1	
FOP-8-4	22	HZW7-90102-U01	SCREW, PAN, 5X30	4	
FOP-8-4	23	HZW7-90103-U01	SCREW, PAN, 6X35	3	
FOP-8-4	24	HZW7-90104-U01	SCREW, TAPPING, 6X30	3	
FOP-8-4	25	HZW7-90301-U01	NUT, HEX., 6MM	3	
FOP-8-4	26	HZW5-90501-U00	WASHER, LOCK, 5MM	4	
FOP-8-4	27	HZW7-90502-U00	WASHER, PLAIN, 6MM	3	
FOP-8-4	28	HCO-94540-06029	E-RING, 6MM	2	

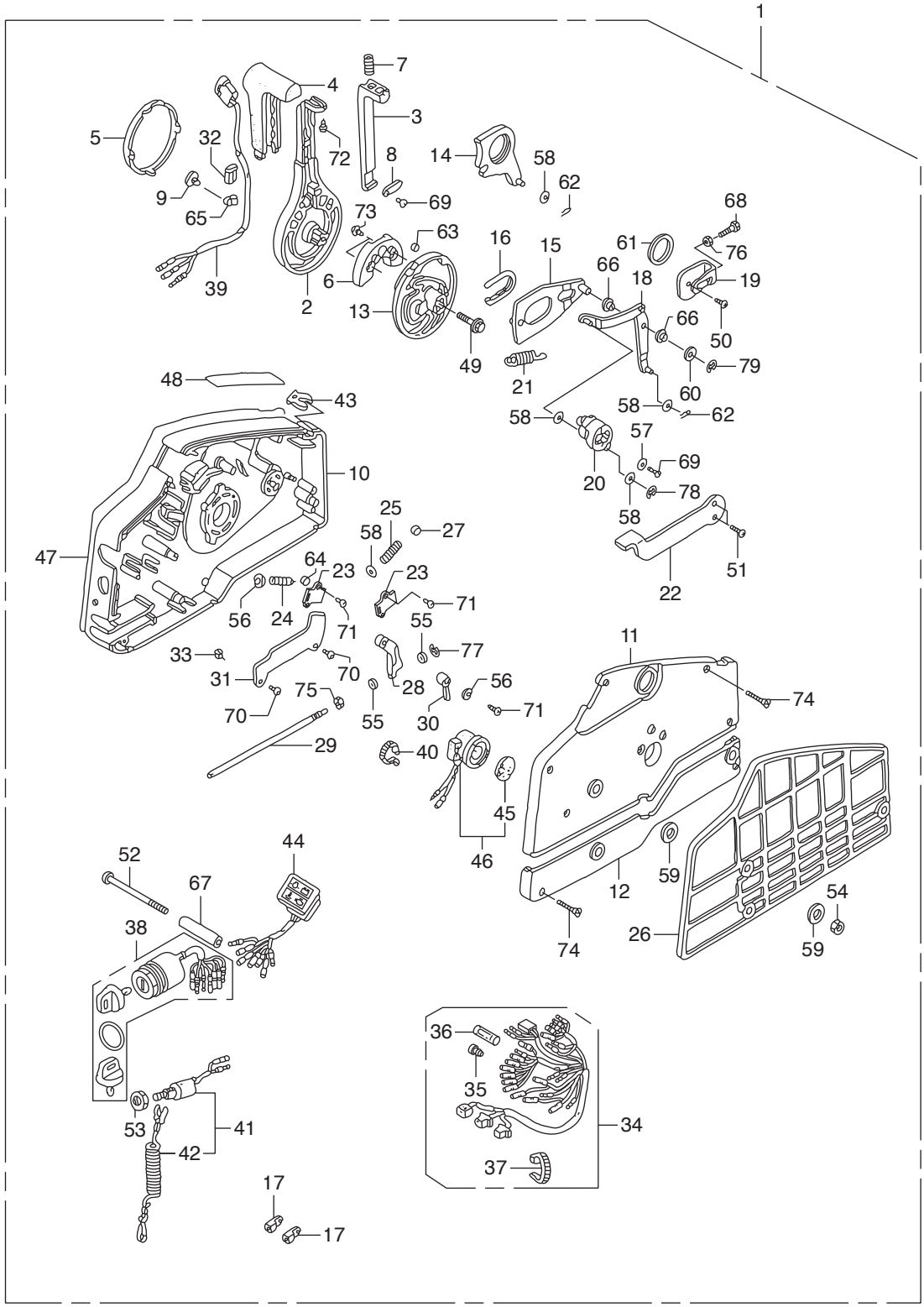
1
7
4
3
5
32
72
8
14
58
62
9
69
65
73
63
16
15
61
68
76
66
18
19
6
39
2
13
66
50
49
21
79
60
48
43
58
62
58
57
69
10
20
78
58
25
27
58
47
64
23
23
51
22
56
24
71
71
55
33
77
11
31
70
28
56
75
74
70
55
30
71
29
40
45
46
44
52
67
12
59
54
38
74
26
59
36
35
34
53
41
42
37
17
17

Ref.No.		Part No.	Description	Q'ty	Remarks
				BFT115A	
FOP-8-6	1	HZZ3-24800-R00	BOX ASSY., REMOTE CONTROL	1	LD
FOP-8-6		HZZ3-24800-R50	BOX ASSY., REMOTE CONTROL	1	LU,XU
FOP-8-6	2	HZV5-24811-010	HANDLE, REMOTE CONTROL	1	
FOP-8-6	3	HZV5-24812-000	LEVER, HANDLE LOCK	1	
FOP-8-6	4	HZV5-24813-000	GRIP, REMOTE CONTROL HANDLE	1	
FOP-8-6	5	HZV5-24814-010	CAP, HANDLE	1	
FOP-8-6	6	HZV5-24815-010	BLOCK, NEUTRAL LOCK	1	
FOP-8-6	7	HZV5-24816-000	SPRING, REMOTE CONTROL HANDLE	1	
FOP-8-6	8	HZV5-24817-000	PLATE, LEVER SETTING	1	
FOP-8-6	9	HZV5-24818-003	CLAMP, HARNESS	1	
FOP-8-6	10	HZV5-24820-010	HOUSING COMP., REMOTE CONTROL	1	BOX(A)
FOP-8-6	11	HZV5-24830-010	HOUSING COMP., REMOTE CONTROL	1	BOX(B)
FOP-8-6	12	HZV5-24836-000	HOUSING, REMOTE CONTROL BOX(C)	1	
FOP-8-6	13	HZV5-24841-000	WHEEL, CONTROL	1	
FOP-8-6	14	HZV5-24845-000	ARM COMP., SHIFT LINK	1	
FOP-8-6	15	HZV5-24850-000	PLATE COMP., SLIDING	1	
FOP-8-6	16	HZV5-24854-000	COLLAR, SLIDING PLATE	1	
FOP-8-6	17	HZV5-24855-000	PIVOT, SHIFT	2	
FOP-8-6	18	HZV5-24860-000	ARM COMP., LINK JOINT	1	
FOP-8-6	19	HZV5-24865-000	BRACKET, LINK JOINT	1	
FOP-8-6	20	HZV5-24875-000	WHEEL, ACCELERATOR	1	
FOP-8-6	21	HZV5-24876-000	SPRING, ACCELERATOR WHEEL	1	
FOP-8-6	22	HZV5-24878-000	LEVER, IDLE	1	
FOP-8-6	23	HZV5-24881-000	PLATE, SPRING SETTING	2	
FOP-8-6	24	HZV5-24883-000	SPRING, SHIFT CLICK	1	
FOP-8-6	25	HZV5-24884-000	SPRING, CHOKE RETURN	1	
FOP-8-6	26	HZV5-24885-000	SPACER, REMOTE CONTROL BOX	1	
FOP-8-6	27	HZV5-24887-000	SPACER, CLICK SPRING	1	
FOP-8-6	28	HZV5-24891-000	BLOCK, THROTTLE FRICTION	1	

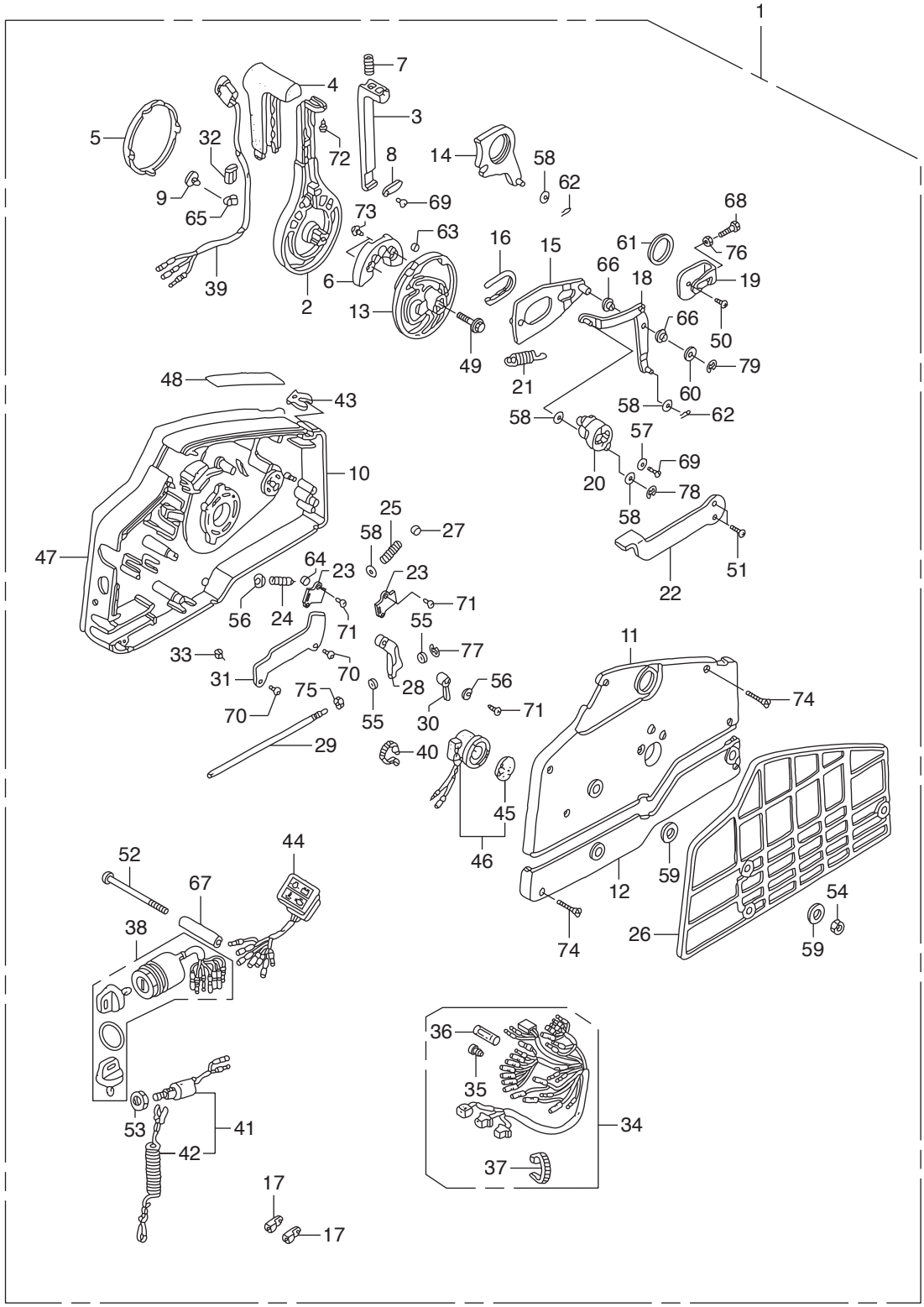
1
7
4
3
5
32
72
8
14
58
62
9
69
65
73
63
68
16
15
61
76
66
18
19
6
39
2
13
66
50
49
21
79
60
48
43
58
62
58
57
69
10
20
78
58
25
27
58
47
64
23
23
51
22
56
24
71
71
55
33
77
11
31
70
28
56
75
74
70
55
30
71
29
40
45
46
44
52
67
59
12
54
38
74
26
59
36
35
34
53
41
42
37
17
17

Ref.No.		Part No.	Description	Q'ty BFT115A	Remarks
FOP-8-6	29	HZV5-24892-000	BOLT, FRICTION	1	
FOP-8-6	30	HZV5-24894-000	SPACER, NEUTRAL SWITCH	1	
FOP-8-6	31	HZV5-24895-000	CLAMP, POWER TILT CORD	1	
FOP-8-6	32	HZV5-24897-000	PIPE, HARNESS GUIDE	1	
FOP-8-6	33	HZV5-24898-000	SPACER, CABLE CLAMP	1	
FOP-8-6	34	HZZ5-32530-000	CABLE ASSY., REMOTE CONTROL(B)	1	
FOP-8-6	35	HZV5-32823-003	PLUG, INNER CONNECTOR	7	
FOP-8-6	36	HZV5-32824-003	PLUG, OUTER CONNECTOR	1	
FOP-8-6	37	H952-32901-770	TIE, CABLE(NATURAL)(2.4X92)	1	
FOP-8-6	38	HZZ3-35100-R11	SWITCH ASSY., COMBINATION	1	
FOP-8-6	39	HZV5-35370-823	SWITCH ASSY., POWER TRIM-TILT	1	
FOP-8-6	40	HMG9-35701-950	BAND(BLACK 3.5X140)	1	
FOP-8-6	41	HZV5-36180-033	SWITCH ASSY., EMERGENCY STOP	1	
FOP-8-6	42	HZV4-36182-651	CORD COMP., EMERGENCY	1	
FOP-8-6	43	HZV4-36187-652	CLIP, EMERGENCY LOCK	1	
FOP-8-6	44	HZZ5-37210-013	LAMP ASSY., INDICATION	1	
FOP-8-6	45	H341-38403-672	PLATE, WINKER BUZZER	1	
FOP-8-6	46	HZV5-38410-003	BUZZER COMP., WARNING	1	
FOP-8-6	47	HZZ3-87701-R00	PLATE, REMOTE CONTROL	1	LD
FOP-8-6					
FOP-8-6					
FOP-8-6	48	HZW9-87702-800	MARK, FAST IDLE	1	
FOP-8-6	49	HZW9-90008-000	BOLT, FLANGE, 8X35	1	
FOP-8-6	50	HMM4-90105-000	SCREW, PAN, 6X10	1	
FOP-8-6	51	HZW4-90108-000	SCREW, FLAT, 5X12	2	
FOP-8-6	52	HZV5-90125-000	SCREW, 6X95	3	
FOP-8-6	53	H921-90302-000	NUT, HEX., 16MM	1	
FOP-8-6	54	HZV4-90304-000	NUT, HEX., 6MM	3	
FOP-8-6	55	HZW4-90401-000	WASHER, PLAIN, 4MM	2	

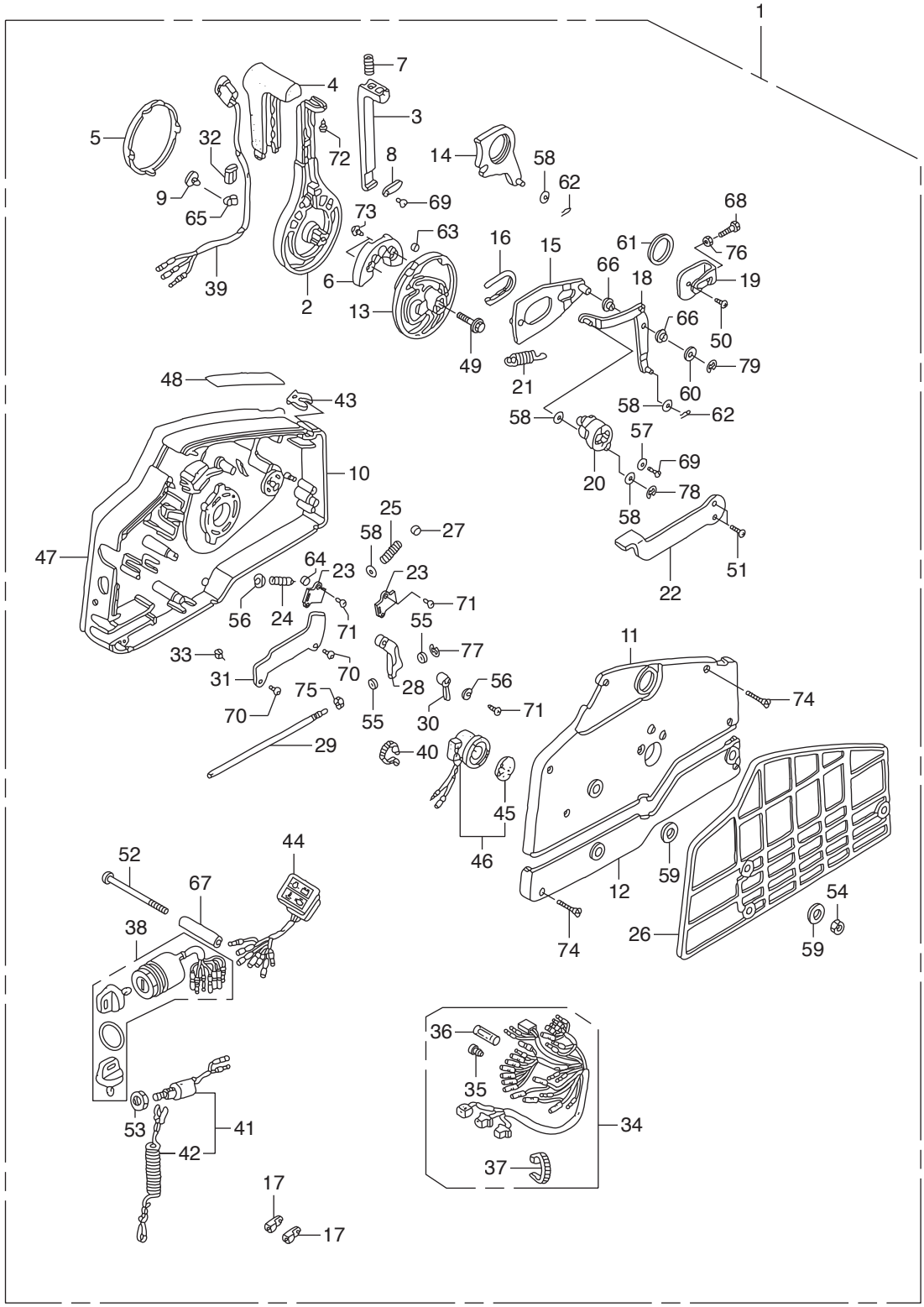
1
7
4
3
5
32
72
8
14
58
62
9
69
65
73
63
68
16
15
61
76
66
18
19
6
39
2
13
66
50
49
21
79
60
48
43
58
62
58
57
69
10
20
78
58
25
27
58
47
64
23
23
51
22
56
24
71
71
55
33
77
11
31
70
28
56
75
74
70
55
30
71
29
40
45
46
44
52
67
12
59
54
38
74
26
59
36
35
34
53
41
42
37
17
17

Ref.No.		Part No.	Description	Q'ty BFT115A	Remarks
FOP-8-6	56	HZW4-90402-000	WASHER, PLAIN, 5MM	2	
FOP-8-6	57	HZV4-90502-000	WASHER, PLAIN, 5MM	1	
FOP-8-6	58	H921-90504-010	WASHER, PLAIN, 6MM	5	
FOP-8-6	59	H921-90512-010	WASHER, 6MM	6	
FOP-8-6	60	H921-90518-000	WASHER, PLAIN, 8MM	1	
FOP-8-6	61	HZV5-90557-000	WASHER, 28MM	1	
FOP-8-6	62	HZV5-90751-000	PIN, LOCK, 6MM	2	
FOP-8-6	63	HZV5-90772-000	PIN, 6X6	1	
FOP-8-6	64	HZV5-91151-000	ROLLER, CLICK	1	
FOP-8-6	65	HSB6-91475-000	CLIP, WIRE HARNESS(6.3MM)	1	
FOP-8-6	66	HZV5-91567-000	COLLAR, LINK JOINT	2	
FOP-8-6	67	HZV5-91570-000	COLLAR, DISTANCE, 6X10X43.5	3	
FOP-8-6	68	HCO-92101-05016-4J	BOLT, HEX., 5X16	1	
FOP-8-6	69	HCO-93500-05010-4J	SCREW, PAN, 5X10	2	
FOP-8-6	70	HCO-93901-250J0	SCREW, TAPPING, 5X8	2	
FOP-8-6	71	HCO-93901-251J0	SCREW, TAPPING, 5X10	3	
FOP-8-6	72	HCO-93901-252J0	SCREW, TAPPING, 5X12	1	
FOP-8-6	73	HCO-93903-262J0	SCREW, TAPPING, 6X16	2	
FOP-8-6	74	HCO-93905-255J0	SCREW, TAPPING, 5X25	7	
FOP-8-6	75	HCO-94001-06490-0S	NUT, HEX., 6MM	1	
FOP-8-6	76	HCO-94002-05490-0S	NUT, HEX., 5MM	1	
FOP-8-6	77	HCO-94540-03029	E-RING, 3MM	1	
FOP-8-6	78	HCO-94540-04029	E-RING, 4MM	1	
FOP-8-6	79	HCO-94540-07029	E-RING, 7MM	1	

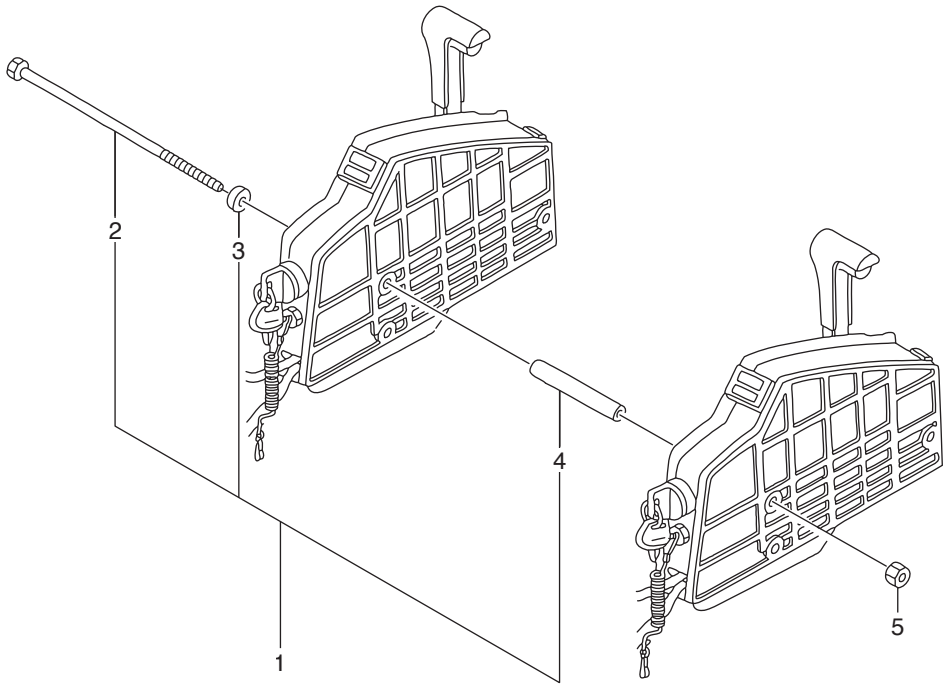
2
3
4
5
1

Ref.No.		Part No.	Description	Q'ty	Remarks
				BFT115A	
FOP-9	1	HZW5-06900-U00	BOLT KIT, SIDE REMOTE CONTROL	1	
FOP-9	2	HZW5-90021-U00	BOLT, SPECIAL, 6X220	3	
FOP-9	3	HZW5-90511-U00	COLLAR, DISTANCE(A)	3	
FOP-9	4	HZW5-90512-U00	COLLAR, DISTANCE(B)	3	
FOP-9	5	HCO-94001-06490-0S	NUT, HEX., 6MM	3	

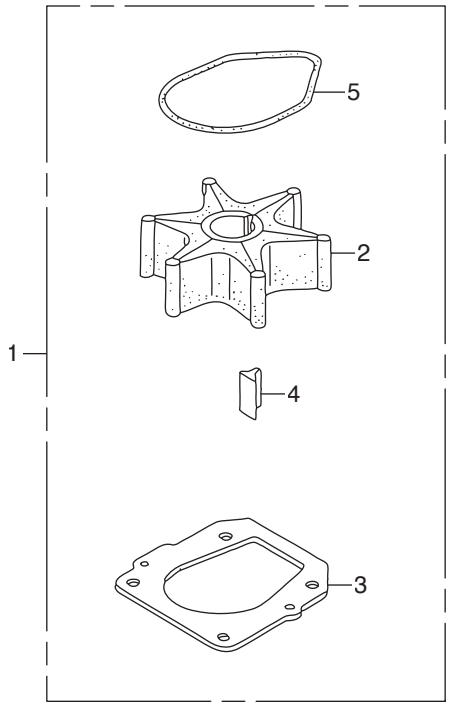
5
2
1
4
3

Ref.No.		Part No.	Description	Q'ty	Remarks
				BFT115A	
FOP-10	1	HZY6-06192-000	PUMP KIT, IMPELLER	1	
FOP-10	2	HZW1-19210-B04	IMPELLER, PUMP	1	
FOP-10	3	HZY6-19234-000	GASKET B, IMPELLER	1	
FOP-10	4	HZW1-90752-B02	KEY, WOODRUFF	1	
FOP-10	5	HZW1-91356-B00	O-RING, WATER PUMP	1	

FOP-10-1 WATER PUMP IMPELLER KIT (2)

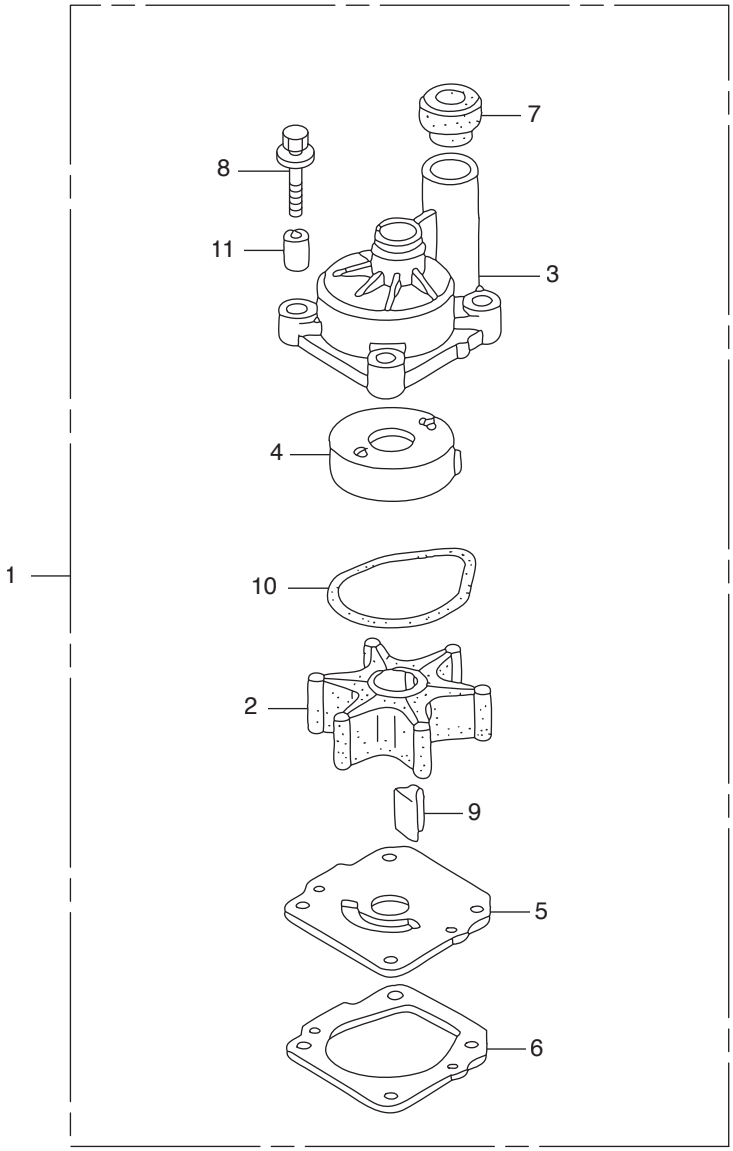

Ref.No.		Part No.	Description	Q'ty	Remarks
				BFT115A	
FOP-10-1	1	HZY6-06193-A01	PUMP KIT, IMPELLER	1	
FOP-10-1	2	HZW1-19210-B04	IMPELLER, PUMP	1	
FOP-10-1	3	HZY6-19221-A00	HOUSING, IMPELLER	1	
FOP-10-1	4	HZW1-19223-B00	LINER, PUMP	1	
FOP-10-1	5	HZY6-19231-000	COVER, IMPELLER	1	
FOP-10-1	6	HZY6-19234-000	GASKET B, IMPELLER	1	
FOP-10-1	7	HZW1-19253-B01	RING, WATER TUBE SEAL	1	
FOP-10-1	8	HZY6-90116-000	BOLT-WASHER, 8X40	4	
FOP-10-1	9	HZW1-90752-B02	KEY, WOODRUFF	1	
FOP-10-1	10	HZW1-91356-B00	O-RING, WATER PUMP	1	
FOP-10-1	11	HZY6-91552-000	COLLAR, DISTANCE	4	

FOP-11 INTERFACE CABLE KIT

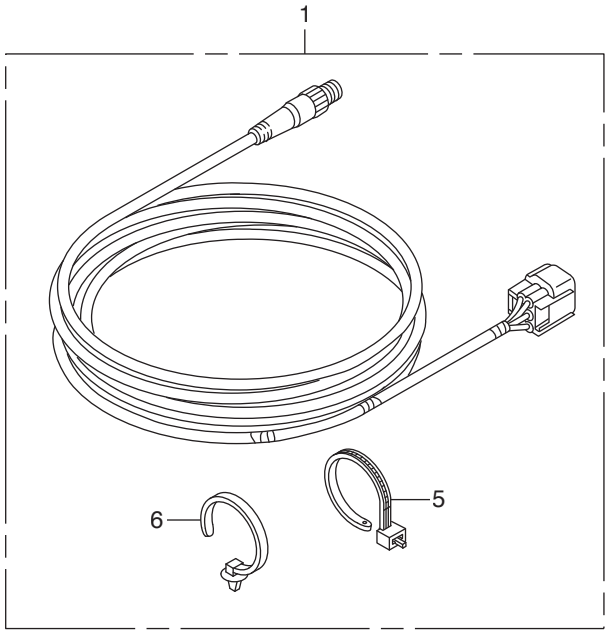

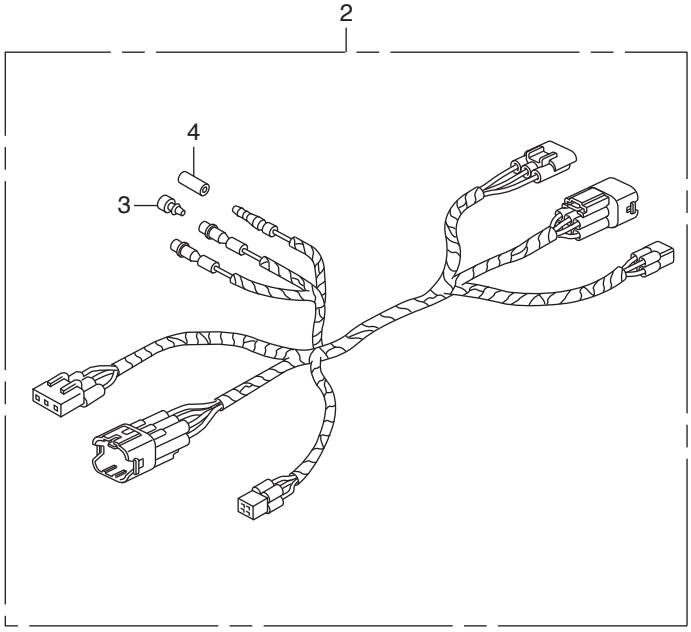

Ref.No.		Part No.	Description	Q'ty	Remarks
				BFT115A	
FOP-11	1	HZZ3-06328-762	KIT, CABLE(NMEA)(6FT)	1	
FOP-11	2	HZZ3-32186-000	HARNESS ASSY., REMOTE CONTROL	1	SUB
FOP-11	3	HZV5-32823-003	PLUG, INNER CONNECTOR	2	
FOP-11	4	HZV5-32824-003	PLUG, OUTER CONNECTOR	1	
FOP-11	5	HZY1-90650-003	TIE, CABLE	2	
FOP-11	6	HSTK-91540-003	CLIP, HARNESS BAND(BLACK)	2	(155.3MM)

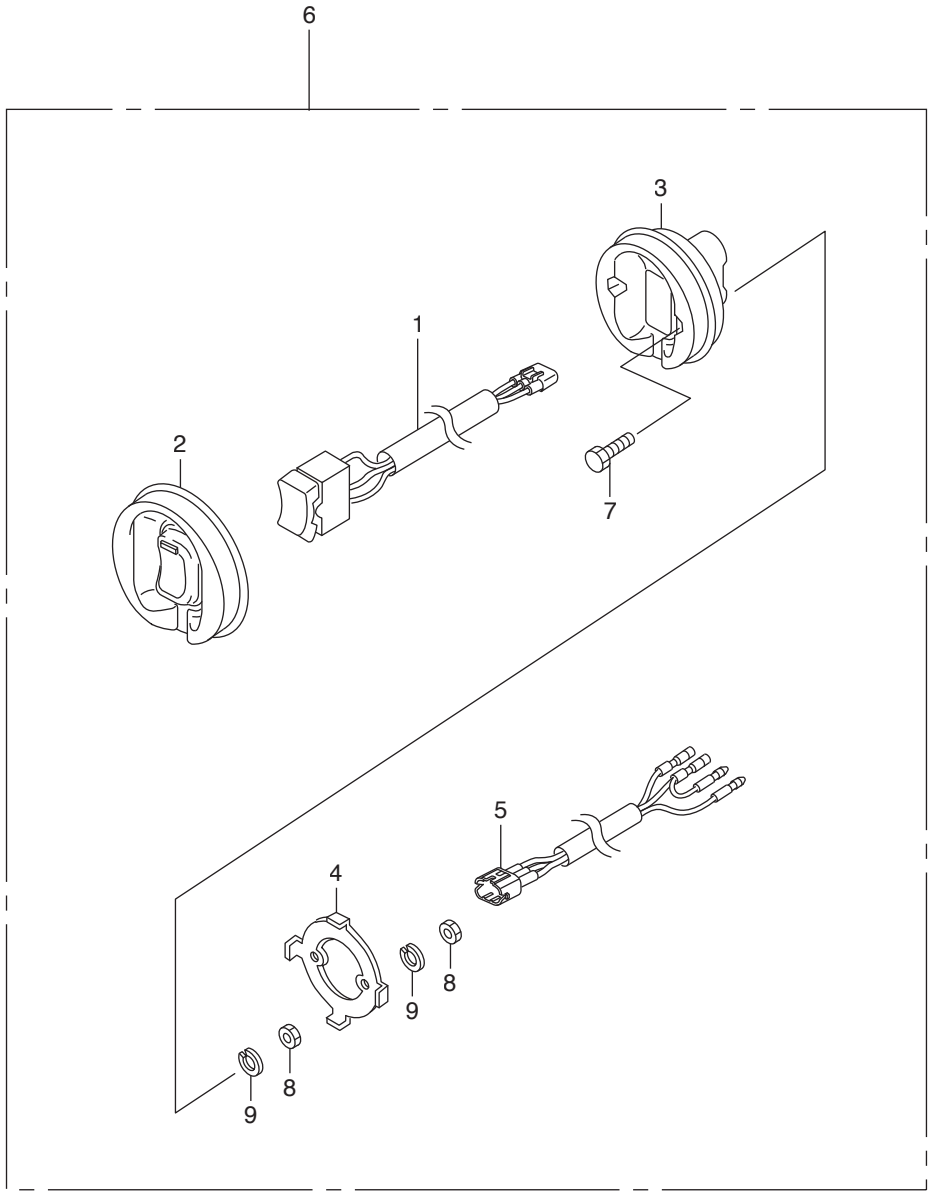
6
3
1
2
7
5
4
8
9
8
9

Ref.No.		Part No.	Description	Q'ty BFT115A	Remarks
FOP-12	1	HZZ3-35340-741	SWITCH ASSY., TROLLING CONTROL	1	
FOP-12	2	HZZ3-35341-740	RUBBER, TROLLING CONTROL	1	SWITCH PANEL
FOP-12	3	HZZ3-35342-740	BODY, TROLLING CONTROL SWITCH	1	PANEL
FOP-12	4	HZZ3-35343-740	BRACKET, TROLLING CONTROL	1	SWITCH PANEL
FOP-12	5	HZZ3-35344-740	HARNESS, TROLLING CONTROL	1	SWITCH PANEL
FOP-12	6	HZZ3-35345-741	PANEL ASSY., TROLLING CONTROL	1	
FOP-12	7	HCO-92101-04020-4J	BOLT, HEX., 4X20	2	
FOP-12	8	HCO-94001-04490-0S	NUT, HEX., 4MM	4	
FOP-12	9	HCO-94111-04500	WASHER, SPRING, 4MM	4	

FOP-13 SPEED SENSOR TUBE KIT

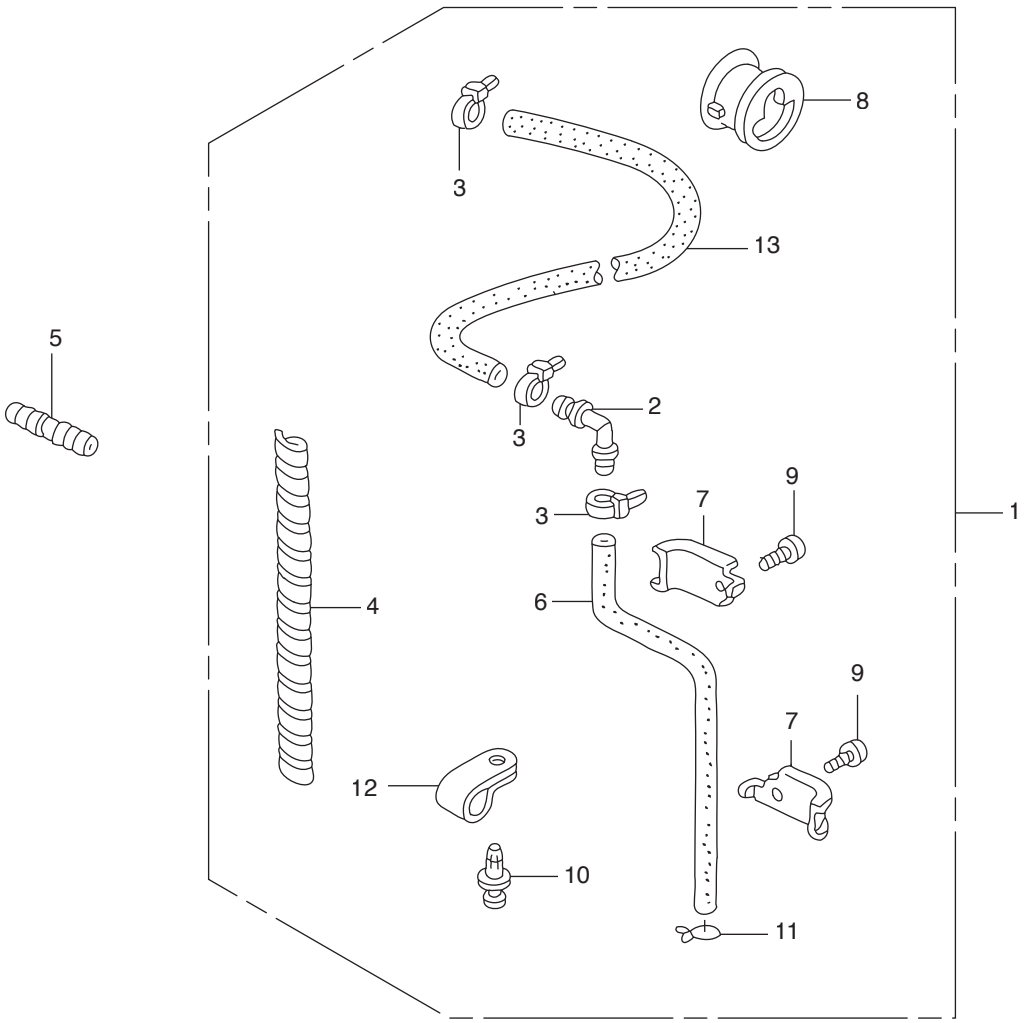

Ref.No.		Part No.	Description	Q'ty BFT115A	Remarks
FOP-13	1	HZY6-06411-000	TUBE KIT, SPEED SENSOR	1	
FOP-13	2	HGE1-17357-670	JOINT A, BREATHER	1	
FOP-13	3	HKM3-32161-003	BAND, WIRE	3	
FOP-13	4	HZY6-36104-003	TUBE, SPIRAL	1	
FOP-13	5	HZV5-41171-000	END, NIPPLE	1	
FOP-13	6	HZY6-41173-000	TUBE, SPEED SENSOR	1	
FOP-13	7	HZY6-50209-000	PLATE, SPEED SENSOR TUBE	2	
FOP-13	8	HZY6-56118-000	BUSH, MOTOR CODE	1	
FOP-13	9	HZV5-90119-000	SCREW, PAN, 6X8	2	
FOP-13	10	HZV5-90127-003	SCREW, RIVET, 5X10	2	
FOP-13	11	H921-90602-000	CLIP, TUBE(B8)	1	
FOP-13	12	H750-90628-000	CLIP(14MM)	2	
FOP-13	13	HCO-95005-50950-30	TUBE, 5X950(95005-50001-30M)	1	

INDEX

<A>
ARM ASSY., EX. ROCKER..... E-9-14
ARM ASSY., ROCKER E-9-13
ARM COMP., CAM CHAIN TENSIONER.. E-9-10
ARM COMP., CLICK F-2-8
ARM COMP., LINK JOINT FOP-8-6-18
ARM COMP., SHIFT LINK..... FOP-8-6-14
ARM, NEUTRAL LOCK FOP-8-4-5
ARM, SHIFT..... F-2-13
ARM, THROTTLE F-2-6
ARMATURE COMP..... F-11-6
<B>
BAG, TOOL, 230MM..... F-13-12
BALL, STEEL E-21-6
BALL, STEEL, #7(7/32) F-5-29
BALL, STEEL, #9(9/32) F-5-30
BAND E-18-10-43
BAND(BLACK 3.5X140)..... F-8-10-1
BAND(BLACK 3.5X140)..... FOP-8-6-40
BAND, AIR FLOW E-15-4
BAND, HARNESS..... E-14-30
BAND, HARNESS OFFSET(10) F-7-30-2
BAND, UNDER CASE GROMMET F-8-10-4
BAND, WIRE F-3-2
BAND, WIRE FOP-13-3
BAND, WIRE HARNESS(NATURAL) FOP-6-1-17
BASE FOP-8-4-15
BASE, INJECTOR E-14-10
BEARING A, CONNECTING ROD..... E-7-7
BEARING A, MAIN LOWER(BLUE) E-7-11
BEARING A, MAIN UPPER(BLUE) E-7-9
BEARING B, CONNECTING ROD..... E-7-
BEARING B, MAIN LOWER(BLACK) E-7-
BEARING B, MAIN UPPER(BLACK)..... E-7-
BEARING C, CONNECTING ROD..... E-7-
BEARING C, MAIN LOWER(BROWN).... E-7-
BEARING C, MAIN UPPER(BROWN)..... E-7-
BEARING D, CONNECTING ROD..... E-7-
BEARING D, MAIN LOWER(GREEN)..... E-7-
BEARING D, MAIN UPPER(GREEN) E-7-
BEARING E, CONNECTING ROD E-7-
BEARING E, MAIN LOWER(YELLOW).... E-7-
BEARING E, MAIN UPPER(YELLOW) E-7-
BEARING F, CONNECTING ROD E-7-
BEARING F, MAIN LOWER(PINK) E-7-
BEARING F, MAIN UPPER(PINK)..... E-7-
BEARING G, CONNECTING ROD(RED) .. E-7-
BEARING, FR. E-19-4
BEARING, NEEDLE(25X32X26) F-5-24
BEARING, NEEDLE,..... F-4-26
BEARING, NEEDLE, 20X28X13 ..... F-2-42
BEARING, NEEDLE, 30X37X26 ..... F-5-20
BEARING, RADIAL BALL, 50X90X20 .... F-5-23
BEARING, RR. E-19-3
BEARING, TAPER ROLLER, ... F-4-27
BEARING, TAPER, 50X90X28..... F-5-22
BEARING, THRUST(F)..... F-5-21
BELT, A.C. GENERATOR(4PK810)..... E-13-3
BLOCK ASSY., CYLINDER E-3-6
BLOCK, NEUTRAL LOCK FOP-8-6-6
BLOCK, THROTTLE FRICTION FOP-8-6-28
BODY COMP., CHAMBER..... E-18-10-5
BODY COMP., OIL JET..... E-3-9
BODY, TROLLING CONTROL SWITCH... FOP-12-3
BOLT..... E-19-14
BOLT A, HEAD COVER..... E-9-20-16
BOLT A, THROUGH..... E-21-18
BOLT COMP., OIL JET..... E-3-10
BOLT KIT, SIDE REMOTE CONTROL..... FOP-9-1
BOLT, 1/4-28UNF F-10-26
BOLT, 3/8-24UNF F-10-27
BOLT, CHAIN GUIDE E-10-9
BOLT, CONNECTING ROD E-7-5
BOLT, COVER LOCK F-8-8
BOLT, DRAIN PLUG E-6-15
BOLT, DRAIN PLUG F-3-14
BOLT, FLANGE, 10X105 ..... E-10-18
BOLT, FLANGE, 10X110 ..... E-6-23
BOLT, FLANGE, 10X25..... F-10-32
BOLT, FLANGE, 10X32..... E-9-29
BOLT, FLANGE, 10X40..... E-6-9
BOLT, FLANGE, 10X40..... F-3-20-8
BOLT, FLANGE, 10X40..... F-5-12
BOLT, FLANGE, 10X43..... E-9-10-19
BOLT, FLANGE, 10X45..... E-4-11
BOLT, FLANGE, 10X70..... E-3-29
BOLT, FLANGE, 10X70..... E-9-10-21
BOLT, FLANGE, 10X75..... E-4-8
BOLT, FLANGE, 10X80..... E-6-10
BOLT, FLANGE, 10X80..... E-19-28
BOLT, FLANGE, 10X90..... E-21-21
BOLT, FLANGE, 12MM..... E-5-15
BOLT, FLANGE, 12X47..... E-9-28
BOLT, FLANGE, 12X83..... E-3-20
BOLT, FLANGE, 6X10..... E-14-22
BOLT, FLANGE, 6X12..... E-6-14
BOLT, FLANGE, 6X12..... E-15-19
BOLT, FLANGE, 6X12..... F-2-30
BOLT, FLANGE, 6X12..... F-3-20-9
BOLT, FLANGE, 6X12..... F-7-3
BOLT, FLANGE, 6X12..... F-7-10-10
BOLT, FLANGE, 6X12..... F-7-20-7
BOLT, FLANGE, 6X12..... F-9-28
BOLT, FLANGE, 6X14..... E-4-9
BOLT, FLANGE, 6X14..... E-9-10-17
BOLT, FLANGE, 6X14..... E-9-20-20
BOLT, FLANGE, 6X14..... E-10-15
BOLT, FLANGE, 6X14..... E-14-21
BOLT, FLANGE, 6X14..... E-18-1-20
BOLT, FLANGE, 6X14..... F-2-28
BOLT, FLANGE, 6X14(CT200) E-3-22
BOLT, FLANGE, 6X14(CT200) E-9-10-14
BOLT, FLANGE, 6X14(CT200) F-7-10-9
BOLT, FLANGE, 6X16..... E-9-10-16
BOLT, FLANGE, 6X16..... E-9-20-18
BOLT, FLANGE, 6X16..... E-18-10-47
BOLT, FLANGE, 6X16..... E-19-24
BOLT, FLANGE, 6X16..... F-2-27
BOLT, FLANGE, 6X16..... F-9-25
BOLT, FLANGE, 6X18..... E-6-22
BOLT, FLANGE, 6X18..... F-2-29
BOLT, FLANGE, 6X20..... E-5-18
BOLT, FLANGE, 6X20..... E-9-34
BOLT, FLANGE, 6X20..... E-9-20-19
BOLT, FLANGE, 6X20..... E-9-20-27
BOLT, FLANGE, 6X20..... E-20-10-5
BOLT, FLANGE, 6X20..... F-2-31
BOLT, FLANGE, 6X20..... F-4-18
BOLT, FLANGE, 6X20..... F-7-20-8
BOLT, FLANGE, 6X20..... F-10-28
BOLT, FLANGE, 6X22..... E-4-10
BOLT, FLANGE, 6X22..... F-7-10-11
BOLT, FLANGE, 6X22..... F-8-10-23
BOLT, FLANGE, 6X22..... F-9-26
BOLT, FLANGE, 6X23..... F-10-24
BOLT, FLANGE, 6X25..... E-3-23
BOLT, FLANGE, 6X25..... E-5-17
BOLT, FLANGE, 6X25..... E-10-19
BOLT, FLANGE, 6X25..... E-18-21
BOLT, FLANGE, 6X25..... E-18-10-46
BOLT, FLANGE, 6X25..... F-9-24
BOLT, FLANGE, 6X27..... E-18-19
BOLT, FLANGE, 6X28..... E-9-10-15
BOLT, FLANGE, 6X30..... E-9-35
BOLT, FLANGE, 6X32..... E-9-20-28
BOLT, FLANGE, 6X32..... E-10-20
BOLT, FLANGE, 6X38..... E-9-10-20
BOLT, FLANGE, 6X52..... E-9-20-17
BOLT, FLANGE, 8X100..... E-6-13
BOLT, FLANGE, 8X110..... E-9-20-30
BOLT, FLANGE, 8X18..... F-7-10-12
BOLT, FLANGE, 8X20..... E-3-24
BOLT, FLANGE, 8X20..... E-19-25
BOLT, FLANGE, 8X25..... E-14-27
BOLT, FLANGE, 8X28..... E-19-26
BOLT, FLANGE, 8X30..... E-18-10-48
BOLT, FLANGE, 8X30..... F-9-23
BOLT, FLANGE, 8X32..... E-5-27
BOLT, FLANGE, 8X35..... E-3-25
BOLT, FLANGE, 8X35..... E-14-25
BOLT, FLANGE, 8X35..... F-10-56
BOLT, FLANGE, 8X35..... FOP-8-6-49
BOLT, FLANGE, 8X45..... E-14-26
BOLT, FLANGE, 8X50..... E-3-28
BOLT, FLANGE, 8X50..... E-10-16
BOLT, FLANGE, 8X55..... E-3-19
BOLT, FLANGE, 8X55..... E-10-10
BOLT, FLANGE, 8X55..... F-8-10-22
BOLT, FLANGE, 8X60..... E-15-20
BOLT, FLANGE, 8X75..... E-10-17
BOLT, FLANGE, 8X90..... E-9-20-29
BOLT, FRICTION..... FOP-8-6-29
BOLT, FUEL PIPE E-14-1
BOLT, HEX. F-11-32
BOLT, HEX., 10X235..... F-10-29
BOLT, HEX., 12X119..... F-10-31
BOLT, HEX., 12X130..... E-6-12
BOLT, HEX., 12X130..... F-10-
BOLT, HEX., 12X225..... F-3-20-11
BOLT, HEX., 12X70 ..... E-6-11
BOLT, HEX., 4X20 ..... FOP-12-7
BOLT, HEX., 5X16 ..... FOP-8-6-68
BOLT, HEX., 6X12 ..... F-4-17
BOLT, HEX., 6X14 ..... F-10-30
BOLT, HEX., 6X50 ..... F-3-20
BOLT, OIL CHECK F-3-12
BOLT, RECESSED..... F-11-29
BOLT, SEALING, 14MM..... E-9-3
BOLT, SEALING, 18MM..... E-5-7
BOLT, SEALING, 20MM..... E-3-2
BOLT, SEALING, 20MM..... E-5-1
BOLT, SEALING, 20MM..... E-9-20-21
BOLT, SEALING, 22MM..... E-3-26
BOLT, SEALING, 22MM..... E-5-19
BOLT, SEALING, 28MM..... E-3-3
BOLT, SEALING, 6MM E-18-10-44
BOLT, SOCKET(A) F-11-30
BOLT, SOCKET(B) F-11-31
BOLT, SOCKET, 6X16 ..... F-8-9
BOLT, SOCKET, 6X20 ..... F-8-7
BOLT, SOCKET, 6X25 ..... E-1-5
BOLT, SOCKET, 6X25 ..... E-20-3
BOLT, SPECIAL ADJUSTER..... E-19-23
BOLT, SPECIAL, 6X17..... F-8-20-14
BOLT, SPECIAL, 6X220 ..... FOP-9-2
BOLT, SPECIAL, 6X31..... E-9-10-18
BOLT, SPECIAL, 8MM..... E-5-14
BOLT, STUD E-19-8
BOLT, STUD 2, 8X25..... E-14-23
BOLT, STUD, 10X55 ..... F-9-27
BOLT, STUD, 12X150..... F-10-25
BOLT, STUD, 8X32 ..... E-14-24
BOLT, TENSIONER..... E-19-27
BOLT, TENSIONER PIVOT E-9-27
BOLT-WASHER E-19-13
BOLT-WASHER, 10X30 ..... E-10-11
BOLT-WASHER, 10X32 ..... F-3-13
BOLT-WASHER, 10X40 ..... F-3-15
BOLT-WASHER, 11X155..... E-9-20-15
BOLT-WASHER, 11X95 ..... E-3-21
BOLT-WASHER, 16X49 ..... E-7-15
BOLT-WASHER, 5X30 ..... E-15-18
BOLT-WASHER, 6X25 ..... E-13-5
BOLT-WASHER, 6X25 ..... E-15-17
BOLT-WASHER, 6X27(CT200)..... E-20-10-4
BOLT-WASHER, 8X10 ..... E-3-11
BOLT-WASHER, 8X30 ..... F-3-20-10
BOLT-WASHER, 8X30 ..... F-8-10-24
BOLT-WASHER, 8X35 ..... E-14-20
BOLT-WASHER, 8X35 ..... E-18-20
BOLT-WASHER, 8X35 ..... E-18-10-45
BOLT-WASHER, 8X40 ..... F-4-19
BOLT-WASHER, 8X40 ..... FOP-10-1-8
BOSS, FLYWHEEL E-5-13
BOX ASSY., JUNCTION F-7-20-1
BOX ASSY., REMOTE CONTROL FOP-8-6-1
BOX ASSY., REMOTE CONTROL FOP-8-6-

BOX KIT, REMOTE CONTROL..... FOP-8-1
BOX KIT, REMOTE CONTROL..... FOP-8-2-1
BOX KIT, REMOTE CONTROL..... FOP-8-4-1
BRACKET A, CABLE..... F-2-21
BRACKET A, COUPLER..... F-7-10-1
BRACKET A, HARNESS CLIP..... E-14-15
BRACKET ASSY..... F-11-5
BRACKET B, CABLE..... F-7-10-6
BRACKET B, HARNESS CLIP..... E-9-10-9
BRACKET C, HARNESS CLIP..... E-9-10-10
BRACKET COMP., A.C. GENERATOR E-19-17
BRACKET D, HARNESS CLIP..... E-3-15
BRACKET E, HARNESS CLIP..... E-15-9
BRACKET F, CLIP..... E-9-20-12
BRACKET, BUZZER..... FOP-6-1-14
BRACKET, CLIP B..... E-3-14
BRACKET, FR..... E-21-10
BRACKET, FR. UNDER COVER..... F-8-10-5
BRACKET, HOOK..... F-8-3
BRACKET, L. SIDE COVER..... F-8-10-7
BRACKET, L. STERN..... F-10-13
BRACKET, LINK JOINT..... FOP-8-6-19
BRACKET, NEUTRAL SWITCH..... F-2-23
BRACKET, R. SIDE COVER..... F-8-10-6
BRACKET, R. STERN..... F-10-12
BRACKET, RELAY..... E-3-18
BRACKET, REMOTE CONTROL..... FOP-8-12
BRACKET, REMOTE CONTROL..... FOP-8-2-13
BRACKET, RR..... E-21-11
BRACKET, SENSOR CORD..... E-15-10
BRACKET, SHIFT LINK..... F-2-19
BRACKET, TILTING..... F-10-17
BRACKET, TROLLING CONTROL..... FOP-12-4
BRACKET, WATER TUBE CLAMP..... E-4-5
BREAKER ASSY..... F-11-1
BRUSH ASSY..... F-11-2
BRUSH SET..... E-21-7
BUFFER, PLATE..... E-18-1-4
BUSH A, COVER LOCK..... F-2-25
BUSH A, COVER LOCK..... F-8-10-11
BUSH A, COVER LOCK..... F-8-10-12
BUSH B, COVER LOCK..... F-8-10-13
BUSH COMP., VERTICAL SHAFT..... F-3-20-2
BUSH, BLADE BRAKE..... F-2-26
BUSH, INSULATION..... E-19-20
BUSH, LOWER CYLINDER..... F-11-25
BUSH, MOTOR CODE..... F-11-19
BUSH, MOTOR CODE..... FOP-13-8
BUSH, SWIVEL CASE..... F-10-11
BUSH, SWIVEL CASE..... F-11-10
BUSH, TILT ARM..... F-10-16
BUTTON, THROTTLE..... FOP-8-9
BUTTON, THROTTLE..... FOP-8-2-10
BUTTON, THROTTLE..... FOP-8-4-8
BUZZER COMP., WARNING..... FOP-6-1-13
BUZZER COMP., WARNING..... FOP-8-6-46
<C>
CABLE ASSY., REMOTE CONTROL(B) ... FOP-8-6-34
CABLE ASSY., STARTER..... F-7-10-2
CABLE ASSY., SWITCH PANEL..... FOP-6-9
CABLE ASSY., SWITCH PANEL..... FOP-6-
CABLE ASSY., SWITCH PANEL..... FOP-6-
CABLE COMP. A, COVER LOCK..... F-8-10-8
CABLE COMP. B, COVER LOCK..... F-8-10-9
CABLE SET, PANEL INDICATOR..... FOP-6-2
CABLE SET, PANEL INDICATOR..... FOP-6-
CABLE SET, PANEL INDICATOR..... FOP-6-
CAMSHAFT COMP., EX..... E-9-4
CAMSHAFT COMP., IN..... E-9-1
CAP COMP., OIL TANK..... F-11-28
CAP, BOLT, 8MM..... E-3-27
CAP, GRIP..... FOP-8-7
CAP, GRIP..... FOP-8-2-9
CAP, HANDLE..... FOP-8-6-5
CAP, L. SIDE COVER..... F-8-10-21
CAP, OIL(YELLOW)..... E-3-12
CAP, REGULATOR..... E-14-6
CAP, SWITCH..... FOP-8-8
CAP, WATER JOINT..... F-8-20-1
CARTRIDGE, OIL FILTER..... E-5-10
CASE ASSY., BALANCER HOLDER..... E-10-1
CASE ASSY., CHAIN..... E-9-10-1
CASE ASSY., ELECTRONIC PARTS..... E-20-10-1
CASE ASSY., GEAR(L)..... F-3-10-1
CASE ASSY., GEAR(XL)..... F-3-10-
CASE COMP., MOUNT..... F-9-21
CASE COMP., PUMP..... E-18-10-27
CASE COMP., SILENCER..... E-15-5
CASE, EXTENSION..... F-3-20-
CASE, EXTENSION(L)..... F-3-20-1
CASE, GEAR..... F-3-3
CASE, OIL..... E-6-1
CASE, SWIVEL..... F-10-9
CHAIN(176L)(BORG WARNER)..... E-9-7
CHAIN(62L)..... E-10-5
CIRCLIP, EXTERNAL, 14MM..... F-5-28
CIRCLIP, EXTERNAL, 39MM..... F-10-48
CIRCLIP, INTERNAL..... F-11-34
CIRCLIP, INTERNAL, 40..... F-3-20-16
CLAMP..... F-6-5
CLAMP..... F-6-8
CLAMP..... FOP-1-2
CLAMP B, WATER TUBE..... E-4-12
CLAMP, 18.5MM..... E-9-10-28
CLAMP, 18.5MM..... E-13-7
CLAMP, ENGINE SUB CORD..... F-7-30-3
CLAMP, FUEL HOSE..... E-15-23
CLAMP, HARNESS..... FOP-8-6-9
CLAMP, HOSE..... E-18-12
CLAMP, HOSE..... F-7-30-1
CLAMP, PIPE..... E-18-13
CLAMP, POWER TILT CORD..... FOP-8-6-31
CLAMP, PURGE HOSE..... E-18-30
CLAMP, TUBE(8.0)..... E-18-10-50
CLAMP, TUBE(D10.5)..... E-4-10-8
CLAMP, TUBE(D10.5)..... F-9-29
CLAMP, TUBE(D10.5)..... F-9-31
CLAMP, TUBE(D10.7)..... E-18-22
CLAMP, TUBE(D12)..... E-18-1-22
CLAMP, TUBE(D17)..... E-15-21
CLAMP, TUBE(D25.0)..... E-4-10-10
CLAMP, TUBE(D32.5)..... E-4-10-9
CLAMP, WATER TUBE..... E-4-10-11
CLIP B1, TUBE..... F-9-32
CLIP(10.7MM)..... F-8-20-18
CLIP(14MM)..... FOP-13-12
CLIP, BRAKE PIPE(A)..... F-2-24
CLIP, EMERGENCY LOCK..... FOP-6-1-10
CLIP, EMERGENCY LOCK..... FOP-8-6-43
CLIP, FUEL HOSE..... E-18-25
CLIP, FUEL TUBE, 14..... E-14-31
CLIP, FUEL TUBE, 14..... F-7-10-15
CLIP, HARNESS..... E-18-27
CLIP, HARNESS BAND(BLACK)..... E-3-40
CLIP, HARNESS BAND(BLACK)..... F-7-6
CLIP, HARNESS BAND(BLACK)..... F-7-10-16
CLIP, HARNESS BAND(BLACK)..... FOP-11-6
CLIP, HARNESS BAND(NATURAL)..... E-4-17
CLIP, INJECTOR..... E-14-3
CLIP, MUDGUARD..... F-8-20-19
CLIP, PISTON PIN..... E-7-4
CLIP, SENSOR HOSE..... E-18-18
CLIP, TUBE..... E-18-1
CLIP, TUBE..... E-18-1-1
CLIP, TUBE..... F-9-2
CLIP, TUBE(B1 14.5)..... E-18-23
CLIP, TUBE(B1 14.5)..... E-18-1-21
CLIP, TUBE(B12)..... E-18-24
CLIP, TUBE(B12)..... E-18-1-23
CLIP, TUBE(B12)..... F-9-30
CLIP, TUBE(B8)..... FOP-13-11
CLIP, TUBE(BLACK)(135MM)..... E-18-29
CLIP, TUBE, 3.5..... E-13-6
CLIP, WIRE HARNESS..... F-7-5
CLIP, WIRE HARNESS..... F-8-20-20
CLIP, WIRE HARNESS..... F-10-49
CLIP, WIRE HARNESS(6.3MM)..... FOP-8-6-65
CLIP, WIRE HARNESS, 25MM..... E-18-1-24
CLUTCH COMP., OVERRUNNING..... E-21-2
COIL COMP., PLUG HOLE..... E-20-1
COLLAR..... E-18-10-23
COLLAR..... E-18-10-26
COLLAR, 8.5X14.5..... E-14-35
COLLAR, 8.5X14.5..... E-18-28
COLLAR, 8.5X14.5..... E-18-10-52
COLLAR, C.D.I. UNIT CASE..... E-13-8
COLLAR, C.D.I. UNIT CASE..... E-15-22
COLLAR, C.D.I. UNIT CASE..... E-20-10-6
COLLAR, C.D.I. UNIT CASE..... F-7-10-17
COLLAR, CAMSHAFT..... E-9-33
COLLAR, DISTANCE..... F-4-34
COLLAR, DISTANCE..... FOP-10-1-11
COLLAR, DISTANCE(A)..... FOP-9-3
COLLAR, DISTANCE(B)..... FOP-9-4
COLLAR, DISTANCE, 6.5X11X7.5..... F-9-4
COLLAR, DISTANCE, 6.5X9X3..... F-8-12
COLLAR, DISTANCE, 6.5X9X5..... F-8-20-21
COLLAR, DISTANCE, 6X10X43.5..... FOP-8-6-67
COLLAR, LINK JOINT..... FOP-8-6-66
COLLAR, LOWER CYLINDER..... F-10-23
COLLAR, LOWER MOUNTING..... F-3-20-6
COLLAR, ORIFICE..... F-11-46
COLLAR, SLIDING PLATE..... FOP-8-6-16
COLLAR, STEERING ROD..... F-10-53
CONTROL UNIT, ELECTRONIC..... E-20-10-3
CORD ASSY., INDICATOR(20FT)..... FOP-6-4
CORD ASSY., INDICATOR(25FT)..... FOP-6-
CORD ASSY., INDICATOR(30FT)..... FOP-6-
CORD COMP., EMERGENCY..... FOP-6-1-9
CORD COMP., EMERGENCY..... FOP-8-6-42
COTTER, VALVE(FUJI VALVE)..... E-9-26
COVER ASSY..... FOP-8-4-11
COVER ASSY., ENGINE..... F-8-1
COVER ASSY., OIL PATH..... E-9-20-8
COVER B, TERMINAL..... F-7-10-5
COVER B, TERMINAL(L)..... F-7-2
COVER B, TERMINAL(L)..... F-7-10-4
COVER COMP..... E-18-10-6
COVER COMP., CYLINDER HEAD..... E-1-1
COVER COMP., FUSE..... F-7-20-2
COVER COMP., PLUG HOLE COIL..... E-1-4
COVER, BEARING..... E-19-5
COVER, CHAIN CASE..... E-9-10-2
COVER, DRAIN PLUG..... F-8-20-8
COVER, DUAL GRIP..... FOP-8-2-8
COVER, EX. MANIFOLD..... E-4-3
COVER, FLUSH VALVE..... F-9-14
COVER, FR. SEPARATE..... F-8-20-6
COVER, GRIP..... FOP-8-4-4
COVER, IMPELLER..... F-4-5
COVER, IMPELLER..... FOP-10-1-5
COVER, L. ENGINE UNDER..... F-8-20-10
COVER, L. GRIP..... FOP-8-5
COVER, L. GRIP..... FOP-8-2-6
COVER, LOCK ARM..... FOP-8-4-6
COVER, OIL PUMP..... E-5-4
COVER, PUMP(A)..... E-18-10-29
COVER, PUMP(B)..... E-18-10-28
COVER, R. ENGINE UNDER..... F-8-20-9
COVER, RELIEF VALVE..... F-9-18
COVER, STARTER TERMINAL..... F-7-10-3
COVER, THERMOSTAT..... E-9-10-6
COVER, WATER JACKET..... E-18-10-12
CRANKCASE COMP..... E-3-1
CRANKSHAFT COMP..... E-7-8
CUP SET, WATER SEPARATOR..... E-18-1-3
CUP, FUEL STRAINER..... E-18-1-14
<D>
DAMPER, HOOK..... F-8-4
DOWEL PIN, 10X12..... E-7-17
DOWEL PIN, 10X16..... E-5-25
DOWEL PIN, 10X16..... E-6-20
DOWEL PIN, 10X16..... E-9-20-25
DOWEL PIN, 13X14..... E-3-34
DOWEL PIN, 13X20..... E-3-33
DOWEL PIN, 14X20..... E-5-26
DOWEL PIN, 14X20..... E-6-21
DOWEL PIN, 14X20..... E-9-20-26
DOWEL PIN, 18X13..... E-10-12
DOWEL PIN, 18X22..... E-3-32
DOWEL PIN, 4.2X10.3..... E-9-32
DOWEL PIN, 6X10..... E-6-19
DOWEL PIN, 6X10..... F-3-18
DOWEL PIN, 6X10..... F-3-20-17
DOWEL PIN, 6X10..... F-4-25
DOWEL PIN, 8X10..... E-10-13
DRIVER, SCREW(NO.2 + -)..... F-13-1
DUCT A, SILENCER..... E-13-1
DUCT B, SILENCER..... E-13-2

<E>
END COVER, RR. E-19-19
END, NIPPLE..... F-3-10
END, NIPPLE..... FOP-13-5
E-RING, 10MM..... F-4-35
E-RING, 12MM..... F-2-51
E-RING, 15MM..... F-11-47
E-RING, 3MM FOP-8-6-77
E-RING, 4MM F-2-49
E-RING, 4MM FOP-8-6-78
E-RING, 6MM F-2-50
E-RING, 6MM F-8-10-29
E-RING, 6MM FOP-8-36
E-RING, 6MM FOP-8-2-41
E-RING, 6MM FOP-8-4-28
E-RING, 7MM FOP-8-6-79
<F>
FILTER ASSY., SPOOL VALVE..... E-9-20-7
FILTER ASSY., VTC..... E-9-20-11
FILTER B..... F-11-17
FILTER COMP., ELECTRONIC AIR E-14-16
FLANGE COMP., OIL FILTER..... E-5-11
FLOAT SET..... E-18-10-2
FLYWHEEL COMP. E-5-12
FRAME COMP., MOUNTING F-10-5
FUSE, BLOCK 100A(L TYPE)..... F-7-20-3
FUSE, MINI(10A) F-7-20-10
FUSE, MINI(15A) F-7-20-11
FUSE, MINI(30A) F-7-20-12
<G>
GASKET A, INJECTOR BASE E-14-11
GASKET B, IMPELLER..... F-4-6
GASKET B, IMPELLER..... FOP-10-3
GASKET B, IMPELLER..... FOP-10-1-6
GASKET COMP., CYLINDER HEAD..... E-9-20-6
GASKET COMP., EX. MANIFOLD..... E-4-4
GASKET, EX. GUIDE F-9-6
GASKET, IDLE EX. PORT F-9-8
GASKET, MOUNT CASE..... E-6-8
GASKET, UPPER MOUNTING HOLDER.. F-10-8
GAUGE COMP., OIL LEVEL..... E-6-5
GEAR ASSY., INTERNAL..... E-21-15
GEAR ASSY., PLANETARY..... E-21-3
GEAR COMP., BEVEL(FORWARD 30T) .. F-5-7
GEAR, BEVEL(RVS. 30T)..... F-5-8
GEAR, PINION F-4-16
GENERATOR ASSY., A.C..... E-19-15
GRIP F-13-2
GRIP, REMOTE CONTROL HANDLE..... FOP-8-6
GRIP, REMOTE CONTROL HANDLE..... FOP-8-2-7
GRIP, REMOTE CONTROL HANDLE..... FOP-8-6-4
GROMMET, ELECTRONIC PARTS CASE .. E-20-10-2
GROMMET, EXTENSION CASE F-4-12
GROMMET, GEAR CASE F-3-4
GROMMET, POWER TILT SWITCH F-8-20-4
GROMMET, RELAY F-7-10-8
GROMMET, REMOTE CONTROL CABLE .. F-8-10-2
GROMMET, SILENCER E-15-6
GROMMET, SILENCER DUCT..... E-15-7
GROMMET, TA SENSOR E-15-14
GROMMET, UNDER CASE..... E-13-4
GROMMET, UNDER CASE..... E-15-15
GROMMET, UNDER CASE(C)..... F-8-10-3
GROMMET, UNDER COVER..... F-8-20-5
GROMMET, VAPOR SEPARATOR E-18-10-34
GROMMET, VAPOR SEPARATOR E-18-10-35
GROMMET, WATER CHECK F-8-20-13
GROMMET, WATER TUBE..... E-6-6
GUIDE COMP. B, CAM CHAIN..... E-9-12
GUIDE COMP., BALANCER SHAFT..... E-10-7
GUIDE COMP., CAM CHAIN..... E-9-11
GUIDE COMP., EX. F-9-5
GUIDE COMP., ROD F-11-15
GUIDE COMP., ROD F-11-16
GUIDE, ENGINE COVER AIR F-8-6
GUIDE, EX. VALVE(OS)..... E-9-20-3
GUIDE, IN. VALVE(OS) E-9-20-2
<H>
HANDLE, REMOTE CONTROL..... FOP-8-4
HANDLE, REMOTE CONTROL..... FOP-8-2-5
HANDLE, REMOTE CONTROL..... FOP-8-4-3
HANDLE, REMOTE CONTROL..... FOP-8-6-2
HANGER B, ENGINE E-19-1
HANGER, ENGINE E-3-5
HARNESS ASSY., MAIN WIRE..... F-7-1
HARNESS ASSY., REMOTE CONTROL ... FOP-11-2
HARNESS ASSY., SWITCH PANEL..... FOP-6-1-4
HARNESS COMP..... E-18-10-42
HARNESS, TROLLING CONTROL FOP-12-5
HEAD KIT, CYLINDER..... E-9-20-1
HOLDER..... E-18-10-11
HOLDER ASSY., BRUSH..... E-19-2
HOLDER COMP., BRUSH..... E-21-9
HOLDER, DRAIN TUBE..... F-2-47
HOLDER, NEUTRAL LOCK FOP-8-4-14
HOLDER, OIL FILTER E-5-16
HOLDER, PROPELLER SHAFT F-5-10
HOLDER, SEAL..... F-2-20
HOLDER, SHIFT ROD F-4-11
HOLDER, UPPER MOUNTING F-10-7
HOSE..... F-6-6
HOSE..... F-6-7
HOSE COMP., FUEL E-18-6
HOSE KIT, RIGGING FOP-1-1
HOSE, PRESSURE REGULATOR..... E-18-14
HOUSING ASSY., L. INNER FOP-8-3
HOUSING ASSY., L. INNER FOP-8-2-3
HOUSING ASSY., R. INNER FOP-8-2-4
HOUSING ASSY., R. INNER FOP-8-4-2
HOUSING COMP., DUAL REMOTE..... FOP-8-2-14
HOUSING COMP., REMOTE CONTROL.. FOP-8-13
HOUSING COMP., REMOTE CONTROL.. FOP-8-6-10
HOUSING COMP., REMOTE CONTROL.. FOP-8-6-11
HOUSING, IMPELLER..... F-4-3
HOUSING, IMPELLER..... FOP-10-1-3
HOUSING, LEAD FOP-8-14
HOUSING, LEAD FOP-8-2-15
HOUSING, LOWER CENTER MOUNTING .. F-3-20-7
HOUSING, LOWER MOUNTING F-3-20-4
HOUSING, REMOTE CONTROL BOX(C) .. FOP-8-6-12
HOUSING, WATER SEAL..... F-4-15
<I>
IMPELLER, PUMP F-4-2
IMPELLER, PUMP FOP-10-2
IMPELLER, PUMP FOP-10-1-2
INJECTOR ASSY., FUEL E-14-2
INSULATOR..... E-18-10-31
INSULATOR COMP. E-18-10-30
<J>
JOINT A, BREATHER..... FOP-13-2
JOINT ASSY (INLET) F-6-2
JOINT ASSY (OUTLET)..... F-6-3
JOINT SET E-18-10-8
JOINT, DRIVE F-11-14
JOINT, FOUR-WAY E-4-10-6
JOINT, FUEL PIPE E-14-8
JOINT, FUEL PIPE E-14-9
JOINT, FUEL PIPE E-18-10-38
JOINT, FUEL TUBE..... E-4-10-2
JOINT, FUEL TUBE..... E-18-1-19
JOINT, WATER HOSE F-9-12
<K>
KEY, 4.5X21..... E-7-16
KEY, WOODRUFF F-4-24
KEY, WOODRUFF FOP-10-4
KEY, WOODRUFF FOP-10-1-9
KIT, CABLE(NMEA)(6FT) FOP-11-1
<L>
LABEL, FUSE..... F-12-1
LABEL, FUSE(EU)..... F-12-
LABEL, OIL CAUTION(EF) F-12-8
LAMP ASSY., INDICATION FOP-8-6-44
LAMP ASSY., INDICATION(4-LED)..... FOP-6-1-11
LEVER SET..... E-21-17
LEVER, COVER LOCK F-8-10-10
LEVER, HANDLE LOCK..... FOP-8-6-3
LEVER, IDLE..... FOP-8-6-22
LINE, FUEL..... E-14-4
LINER, PUMP F-4-4
LINER, PUMP FOP-10-1-4
LINER, SWIVEL CASE F-10-10
LINK, THROTTLE F-2-3
LINKAGE, PIVOT F-2-1
LOCK COMP., FR..... F-8-10-19
LOCK COMP., SIDE F-8-10-20
<M>
MANIFOLD COMP., EX..... E-4-2
MANIFOLD COMP., INLET E-14-14
MARK, CAUTION(PICTOGRAPH) F-12-7
MARK, FAST IDLE FOP-8-6-48
MARK, FLUSH MOUNT FOP-8-4-19
MARK, HANDLE FLUSH MOUNT FOP-8-4-18
MARK, R. SIDE STRIPE(BFT115A) F-12-3
MARK, REMOTE CONTROL(DUAL) FOP-8-2-24
MARK, REMOTE CONTROL(SINGLE) FOP-8-21
MARK, RR.(BFT115A) F-12-2
METAL COMP., ANODE..... F-3-9
METAL KIT, ANODE F-10-1
METAL, ANODE..... E-4-1
METAL, BALANCER SHAFT(DAIDO) E-10-8
METER LEAD WIRE..... FOP-2-6
MOTOR ASSY., POWER TILT F-11-4
MOTOR ASSY., STARTER..... E-21-1
MOUNT COMP., UPPER RUBBER F-10-6
<N>
NIPPLE, GREASE F-10-50
NIPPLE, SENSOR F-3-11
NUT, ADJUSTER ROD..... F-10-36
NUT, CASTLE, 18MM F-5-13
NUT, CLIP F-8-20-16
NUT, FLANGE CAP, 10MM..... E-3-30
NUT, FLANGE CAP, 6MM E-1-6
NUT, FLANGE, 10MM F-10-37
NUT, FLANGE, 12MM F-3-20-13
NUT, FLANGE, 12MM F-10-33
NUT, FLANGE, 5MM..... FOP-6-1-2
NUT, FLANGE, 6MM..... E-14-29
NUT, FLANGE, 8MM..... E-14-28
NUT, FLANGE, 8MM..... E-19-29
NUT, HEX., 12MM F-10-54
NUT, HEX., 16MM F-8-20-17
NUT, HEX., 16MM FOP-6-1-16
NUT, HEX., 16MM FOP-8-6-53
NUT, HEX., 18MM F-4-21
NUT, HEX., 20MM F-2-32
NUT, HEX., 4MM FOP-12-8
NUT, HEX., 5MM F-2-48
NUT, HEX., 5MM FOP-8-29
NUT, HEX., 5MM FOP-8-35
NUT, HEX., 5MM FOP-8-2-33
NUT, HEX., 5MM FOP-8-2-34
NUT, HEX., 5MM FOP-8-2-40
NUT, HEX., 5MM FOP-8-6-76
NUT, HEX., 6MM E-19-31
NUT, HEX., 6MM F-8-14
NUT, HEX., 6MM FOP-8-4-25
NUT, HEX., 6MM FOP-8-6-54
NUT, HEX., 6MM FOP-8-6-75
NUT, HEX., 6MM FOP-9-5
NUT, LOCK, 64MM F-4-20
NUT, PULLEY LOCK E-19-7
NUT, SELF-LOCK(25X2.0)..... F-10-35
NUT, SELF-LOCK(3/8-24UNF)..... F-10-38
NUT, SELF-LOCK(7/8-14UNF)..... F-10-34
NUT, SELF-LOCK, 5MM..... F-3-17
NUT, SELF-LOCK, 6MM..... F-3-16
NUT, TAPPET ADJUSTING E-9-30
NUT, TAPPET ADJUSTING E-9-31
NUT, WATER MOUTH F-9-11
NUT-WASHER, 5MM E-19-30
NUT-WASHER, 6MM F-7-4
NUT-WASHER, 8MM F-7-10-13
<O>
OIL SEAL F-11-35
OIL SEAL, 14X26X6 ..... F-2-44
OIL SEAL, 31X46X7(NOK)..... E-5-21
OIL SEAL, 39.5X52X6(ARAI)..... F-10-51
OIL SEAL, 43X58X7(ARAI) E-9-10-22
OIL SEAL, 46X60X9 ..... E-5-20
OIL SEAL, 80X98X10(ARAI) E-3-35
ORIFICE, LOWER BLOCK..... E-3-4
ORIFICE, OIL JET E-3-8
O-RING..... E-15-12
O-RING..... E-18-1-5
O-RING..... E-18-1-17
O-RING..... E-18-10-13
O-RING..... E-18-10-14
O-RING..... E-18-10-15

O-RING..... E-18-10-16
O-RING..... E-18-10-17
O-RING..... E-18-10-18
O-RING..... E-18-10-19
O-RING SET, 3.5X31.7 ..... F-11-43
O-RING, 1.8X69.6 ..... F-11-37
O-RING, 1.8X7.7..... F-11-39
O-RING, 1.9X11 ..... F-11-40
O-RING, 105X3.1..... F-5-27
O-RING, 11.5X3.5 ..... F-9-35
O-RING, 13X1.5(ARAI)..... E-3-39
O-RING, 15.54X2.26..... F-10-52
O-RING, 15X1.9 ..... E-9-10-27
O-RING, 15X1.9 ..... E-9-20-22
O-RING, 15X1.9 ..... E-9-20-23
O-RING, 16MM F-9-34
O-RING, 2.0X70.5 ..... F-11-36
O-RING, 20.6X2.6 ..... E-6-18
O-RING, 22.5X2.4 ..... E-5-22
O-RING, 25X2.4(NOK) F-2-46
O-RING, 26X2.7 ..... E-3-36
O-RING, 3.5X35.7 ..... F-11-41
O-RING, 3.5X38.7 ..... F-11-38
O-RING, 3.5X41.7 ..... F-11-42
O-RING, 33.2X2.4(NOK) E-18-26
O-RING, 37X2.4 ..... E-4-15
O-RING, 55.6X3.5 ..... F-4-31
O-RING, 58.5X3.5 ..... F-4-33
O-RING, 59.4X3.1 ..... E-21-22
O-RING, 6.5X1.5..... E-3-37
O-RING, 6.9X1.45 ..... F-3-19
O-RING, 7.45X3.61(NOK) E-14-34
O-RING, 7.47X3.6 ..... E-14-33
O-RING, 7.8X1.9(ARAI) E-14-32
O-RING, 7.8X1.9(ARAI) E-18-10-51
O-RING, 76.4X3.1 ..... E-4-13
O-RING, 79.8X3.1 ..... E-4-14
O-RING, 9.5X1.5(HONDA KIKAKI) E-9-10-25
O-RING, 9.5X1.9..... E-3-38
O-RING, 9.5X1.9..... E-4-16
O-RING, 9.5X1.9..... E-9-10-26
O-RING, CHAIN CASE..... E-9-10-23
O-RING, THERMOSTAT COVER..... F-9-20
O-RING, WATER PUMP F-4-32
O-RING, WATER PUMP FOP-10-5
O-RING, WATER PUMP FOP-10-1-10
<P>
PACKING E-21-16
PACKING F-11-45
PACKING, CHAIN CASE..... E-9-10-24
PACKING, CYLINDER HEAD COVER..... E-1-2
PACKING, DUAL FOP-8-2-19
PACKING, ELECTRONIC AIR..... E-14-18
PACKING, FLASH VALVE..... F-9-19
PACKING, INTAKE MANIFOLD E-14-12
PACKING, OIL PAN..... E-6-2
PACKING, OIL PUMP BODY..... E-5-3
PACKING, SINGLE..... FOP-8-18
PACKING, THERMOSTAT COVER..... E-9-10-7
PACKING, THERMOSTAT SPACER E-9-10-8
PACKING, THROTTLE BODY E-14-13
PANEL ASSY., TROLLING CONTROL FOP-12-6
PANEL KIT, SWITCH(4-LED)..... FOP-6-1-1
PANEL KIT, SWITCH(4-LED) (EU) FOP-6-1-
PANEL, CONTROL..... FOP-6-1-3
PANEL, CONTROL..... FOP-6-1-
PIN A, DOWEL, 12X16..... E-10-14
PIN, 6X6..... FOP-8-6-63
PIN, LINK F-2-38
PIN, LINK F-2-40
PIN, LOCK, 6MM FOP-8-6-62
PIN, PISTON E-7-3
PIN, SHIFT LINK..... F-2-39
PIN, SHIFTER, 8X47..... F-5-2
PIN, SNAP, 12MM..... F-2-41
PIN, SPLIT, 4.0 ..... F-5-19
PIN, SPRING, 2.5X20..... F-10-55
PIN, UPPER CYLINDER..... F-11-26
PIPE COMP., OIL LEVEL..... F-9-1
PIPE, HARNESS GUIDE..... FOP-8-6-32
PISTON A..... E-7-2
PISTON B..... E-7-
PISTON COMP., FREE..... F-11-22
PIVOT, SHIFT F-2-15
PIVOT, SHIFT FOP-8-6-17
PIVOT, SHIFT SLIDE F-2-16
PLATE..... E-18-1-18
PLATE..... E-18-10-10
PLATE COMP., SLIDING..... FOP-8-6-15
PLATE COMP., THROTTLE F-2-4
PLATE SET, TRANSOM(5.5MM FLAT) ... FOP-7-2
PLATE SET, TRIM ADJUST..... FOP-7-1
PLATE, CABLE CLAMP..... FOP-8-11
PLATE, CABLE CLAMP..... FOP-8-2-12
PLATE, CRANK PULSER..... E-7-13
PLATE, DWELL..... FOP-8-15
PLATE, DWELL..... FOP-8-2-16
PLATE, DWELL..... FOP-8-4-10
PLATE, HANDLE FOP-8-10
PLATE, HANDLE FOP-8-2-11
PLATE, LEVER SETTING..... FOP-8-6-8
PLATE, LOCK F-2-17
PLATE, REMOTE CONTROL FOP-8-6-47
PLATE, REMOTE CONTROL CABLE F-2-5
PLATE, RUBBER SETTING F-3-1
PLATE, SHIFT F-5-6
PLATE, SHIFT PIVOT..... F-2-14
PLATE, SPEED SENSOR TUBE FOP-13-7
PLATE, SPRING SETTING..... FOP-8-6-23
PLATE, STEERING F-10-19
PLATE, STEERING F-10-20
PLATE, TDC PULSE..... E-9-2
PLATE, WATER TUBE E-6-7
PLATE, WINKER BUZZER..... FOP-6-1-12
PLATE, WINKER BUZZER..... FOP-8-6-45
PLUG, INNER CONNECTOR FOP-6-1-5
PLUG, INNER CONNECTOR FOP-8-6-35
PLUG, INNER CONNECTOR FOP-11-3
PLUG, OUTER CONNECTOR..... FOP-6-1-6
PLUG, OUTER CONNECTOR..... FOP-8-6-36
PLUG, OUTER CONNECTOR..... FOP-11-4
PLUG, SPARK(IZFR6K-11)..... E-20-
PLUG, SPARK(KJ20DR-M11) E-20-4
PLUG, SPARK(SKJ20DR-M11)..... E-20-
PLUG, SPARK(ZFR6K-11) E-20-
PLUG, TDC HOLE E-9-20-14
PLUG, VTC HOLE..... E-9-20-9
PORT, IDLE EXHAUST F-9-7
PRIMER BULB..... F-6-4
PRIMER BULB ASSY F-6-1
PROPELLER COMP., THREE BLADES F-5-11
PROPELLER COMP., THREE BLADES F-5-
PROPELLER COMP., THREE BLADES F-5-
PROPELLER COMP., THREE BLADES F-5-
PROPELLER COMP., THREE BLADES F-5-
PROPELLER COMP., THREE BLADES F-5-
PROPELLER COMP., THREE BLADES F-5-
PROPELLER COMP., THREE BLADES F-5-
PROPELLER COMP., THREE BLADES F-5-
PROPELLER COMP., THREE BLADES F-5-
PROPELLER COMP., THREE BLADES F-5-
PROPELLER COMP., THREE BLADES F-5-
PULLER, MINI FUSE F-7-20-4
PULLEY..... E-19-6
PULLEY, CRANKSHAFT E-7-14
PUMP ASSY..... F-11-12
PUMP ASSY., FUEL E-18-5
PUMP ASSY., OIL..... E-5-2
PUMP KIT, IMPELLER..... FOP-10-1
PUMP KIT, IMPELLER..... FOP-10-1-1
PUMP UNIT, FUEL..... E-18-10-4
PUMP UNIT, FUEL(B) E-18-10-9
<R>
RECEIVER, THRUST..... F-10-22
RECTIFIER ASSY. E-19-21
REGULATOR ASSY..... E-19-22
REGULATOR ASSY., PRESSURE..... E-14-5
RELAY ASSY., FUEL PUMP(DENSO)..... F-7-20-5
RELAY ASSY., POWER TILT..... F-7-10-7
RELAY ASSY., POWER(12V-20A)..... F-7-20-6
RETAINER, VALVE SPRING E-9-24
RING E-18-10-32
RING SET, PISTON(STD.)..... E-7-1
RING, BACK UP F-11-18
RING, CROSS PIN..... F-5-3
RING, INNER(15X20X23)..... F-2-43
RING, STOPPER F-2-11
RING, WATER TUBE SEAL..... F-4-8
RING, WATER TUBE SEAL..... FOP-10-1-7
ROD COMP. A, SHIFT(L) F-2-10
ROD COMP. A, SHIFT(XL)..... F-2-
ROD COMP., CONNECTING..... E-7-6
ROD COMP., PISTON F-11-20
ROD COMP., PISTON F-11-21
ROD COMP., PISTON(B) F-11-13
ROD COMP., SHIFT..... F-4-9
ROD COMP., THROTTLE F-2-2
ROD, ADJUSTING F-10-14
ROD, STEERING..... F-10-21
ROLLER, 3X12.8..... F-5-25
ROLLER, 5X8..... E-5-28
ROLLER, CLICK..... FOP-8-6-64
ROTOR ASSY..... E-19-16
ROTOR COMP..... E-21-5
ROTOR, INNER OIL PUMP..... E-5-8
ROTOR, OUTER OIL PUMP..... E-5-9
RUBBER B, STAND STOPPER F-8-20-23
RUBBER COMP., LOWER MOUNT F-3-20-5
RUBBER, FR. CARRIER CUSHION E-14-19
RUBBER, MOUNT CASE SEAL F-9-22
RUBBER, OIL PUMP E-6-3
RUBBER, TROLLING CONTROL..... FOP-12-2
<S>
SCREEN COMP., FUEL STRAINER..... E-18-10-40
SCREEN, L. WATER F-3-7
SCREEN, R. WATER F-3-6
SCREW E-19-9
SCREW E-19-12
SCREW SET..... E-15-1
SCREW SET, DRAIN..... E-18-10-7
SCREW, 6X95 ..... FOP-8-6-52
SCREW, FLAT, 5X12 ..... FOP-8-6-51
SCREW, FLAT, 6X16 ..... E-5-23
SCREW, OVAL, 5X50 ..... F-3-21
SCREW, PAN..... E-18-10-21
SCREW, PAN, 4X10..... FOP-8-26
SCREW, PAN, 4X10..... FOP-8-2-29
SCREW, PAN, 5X10..... FOP-8-23
SCREW, PAN, 5X10..... FOP-8-2-26
SCREW, PAN, 5X10..... FOP-8-6-69
SCREW, PAN, 5X12..... E-18-1-13
SCREW, PAN, 5X16..... FOP-8-22
SCREW, PAN, 5X16..... FOP-8-2-25
SCREW, PAN, 5X16..... FOP-8-4-20
SCREW, PAN, 5X18..... E-15-16
SCREW, PAN, 5X18..... FOP-8-25
SCREW, PAN, 5X18..... FOP-8-2-28
SCREW, PAN, 5X20..... FOP-8-24
SCREW, PAN, 5X20..... FOP-8-2-27
SCREW, PAN, 5X30..... FOP-8-4-22
SCREW, PAN, 5X40..... FOP-6-1-15
SCREW, PAN, 5X40..... FOP-8-28
SCREW, PAN, 5X40..... FOP-8-2-31
SCREW, PAN, 5X55..... FOP-8-2-32
SCREW, PAN, 5X65..... FOP-8-34
SCREW, PAN, 5X65..... FOP-8-2-39
SCREW, PAN, 5X8 ..... E-21-20
SCREW, PAN, 6X10..... FOP-8-6-50
SCREW, PAN, 6X18..... E-4-18
SCREW, PAN, 6X18..... FOP-8-27
SCREW, PAN, 6X18..... FOP-8-2-30
SCREW, PAN, 6X22(SPECIAL) E-21-19
SCREW, PAN, 6X25..... F-8-20-22
SCREW, PAN, 6X35..... FOP-8-4-23
SCREW, PAN, 6X8 ..... F-3-20-12
SCREW, PAN, 6X8 ..... F-11-33
SCREW, PAN, 6X8 ..... FOP-13-9
SCREW, RIVET, 5X10..... F-8-20-15
SCREW, RIVET, 5X10..... FOP-13-10
SCREW, TAPPET ADJUSTING..... E-9-20
SCREW, TAPPET ADJUSTING..... E-9-21
SCREW, TAPPING FOP-1-3
SCREW, TAPPING, 4X12 ..... F-8-13
SCREW, TAPPING, 5X10 ..... FOP-8-6-71
SCREW, TAPPING, 5X12 ..... FOP-8-6-72
SCREW, TAPPING, 5X20 ..... E-13-9
SCREW, TAPPING, 5X25 ..... FOP-8-6-74
SCREW, TAPPING, 5X8 ..... FOP-8-6-70
SCREW, TAPPING, 6X16 ..... FOP-8-6-73

SCREW, TAPPING, 6X30 ..... FOP-8-4-24
SCREW, TRUSS, 4X12..... FOP-8-4-21
SCREW, WASHER E-18-10-22
SCREW-WASHER..... E-18-10-20
SCREW-WASHER..... E-19-10
SCREW-WASHER, 4X25..... E-19-11
SCREW-WASHER, 5X15..... F-7-20-9
SEAL A, COVER UNDER..... F-8-20-11
SEAL A, VALVE STEM(ARAI)..... E-9-20-4
SEAL A, VALVE STEM(NOK) E-9-20-
SEAL B, COVER UNDER..... F-8-20-12
SEAL B, VALVE STEM(ARAI)..... E-9-20-5
SEAL B, VALVE STEM(NOK) E-9-20-
SEAL, ENGINE COVER F-8-2
SEAL, FR. SEPARATE COVER F-8-20-7
SEAL, PLUG HOLE..... E-20-2
SEAL, SPARK PLUG TUBE(NOK) E-1-3
SEAL, WATER..... F-11-44
SEAL, WATER(14X26X8)..... F-2-45
SEAL, WATER, 12X21X6 ..... F-4-30
SEAL, WATER, 22X35X7 ..... F-9-33
SEAL, WATER, 23X36X6 ..... F-4-29
SEAL, WATER, 23X36X8 ..... F-4-28
SEAL, WATER, 30X45X7 ..... F-5-26
SEAT, VALVE SPRING..... E-9-25
SEAT, WATER MOUTH..... F-9-13
SENSOR ASSY., AIR TEMP..... E-15-13
SENSOR ASSY., CRANK..... E-9-10-13
SENSOR ASSY., KNOCK..... E-3-13
SENSOR ASSY., MAP E-15-11
SENSOR ASSY., TDC..... E-9-20-13
SENSOR ASSY., TRIM ANGLE..... F-10-4
SENSOR ASSY., WATER..... E-3-16
SENSOR ASSY., WATER..... E-4-7
SENSOR ASSY., WATER..... E-9-10-11
SENSOR ASSY., WATER..... E-9-10-12
SENSOR, LAF E-4-6
SENSOR, OIL PRESSURE E-3-17
SEPARATOR ASSY., VAPOR E-18-10-33
SEPARATOR ASSY., WATER..... E-18-1-2
SHAFT ASSY., CLUTCH E-21-13
SHAFT ASSY., GEAR..... E-21-14
SHAFT COMP. A, SHIFT..... F-2-12
SHAFT COMP. B, SHIFT..... F-2-18
SHAFT COMP., FR. BALANCER E-10-2
SHAFT COMP., RR. BALANCER E-10-3
SHAFT, COVER OPEN..... F-8-10-17
SHAFT, EX. ROCKER..... E-9-16
SHAFT, FR. LOCK..... F-8-10-18
SHAFT, IN. ROCKER E-9-15
SHAFT, PROPELLER F-5-9
SHAFT, THROTTLE BUTTON FOP-8-4-9
SHAFT, TILTING..... F-10-15
SHAFT, VERTICAL(L)..... F-4-13
SHAFT, VERTICAL(XL) F-4-
SHIFTER, CLUTCH..... F-5-1
SHIM A, BEVEL(0.10) F-5-17
SHIM A, GEAR(0.10)..... F-4-23
SHIM B, BEVEL(0.15) F-5-
SHIM B, GEAR(0.15) F-4-
SHIM C, BEVEL(0.30) F-5-
SHIM C, GEAR(0.30) F-4-
SHIM D, BEVEL(0.50) F-5-
SHIM D, GEAR(0.50)..... F-4-
SLIDER, SHIFT..... F-5-4
SLINGER, OIL F-4-14
SPACER KIT, REMOTE CONTROL BOX .. FOP-8-2
SPACER KIT, REMOTE CONTROL BOX .. FOP-8-2-2
SPACER, CABLE CLAMP FOP-8-17
SPACER, CABLE CLAMP FOP-8-2-18
SPACER, CABLE CLAMP FOP-8-4-13
SPACER, CABLE CLAMP FOP-8-6-33
SPACER, CLICK SPRING..... FOP-8-6-27
SPACER, NEUTRAL SWITCH..... FOP-8-6-30
SPACER, REMOTE CONTROL BOX..... FOP-8-6-26
SPACER, THERMOSTAT COVER E-9-10-5
SPRING COMP., CLICK..... F-10-2
SPRING, ACCELERATOR WHEEL..... FOP-8-6-21
SPRING, AIR FLOW TUBE E-15-3
SPRING, CHOKE RETURN FOP-8-6-25
SPRING, CLICK..... F-2-9
SPRING, CLICK ASSIST..... F-10-3
SPRING, COVER LOCK HOOK F-8-10-14
SPRING, COVER LOCK HOOK F-8-10-15
SPRING, EX. VALVE(GRAY)..... E-9-23
SPRING, FLUSH VALVE F-9-15
SPRING, IN. VALVE(PINK) E-9-22
SPRING, LOCK ADJUSTER..... F-8-5
SPRING, LOCK LEVER RETURN F-8-10-16
SPRING, MOTOR F-11-8
SPRING, NEUTRAL LOCK ARM FOP-8-4-7
SPRING, RELIEF VALVE E-5-6
SPRING, REMOTE CONTROL HANDLE .. FOP-8-6-7
SPRING, SET E-18-10-41
SPRING, SHIFT..... F-5-5
SPRING, SHIFT CLICK..... FOP-8-6-24
SPRING, SHIFT ROD F-4-10
SPRING, SILENCER DUCT GROMMET... E-15-8
SPROCKET COMP., CHAIN DRIVE..... E-7-12
SPROCKET, CAM CHAIN DRIVEN..... E-9-5
SPROCKET, CAM CHAIN DRIVEN IN..... E-9-6
SPROCKET, DRIVEN(17T) E-10-4
STAY A, PLATE..... E-18-10-3
STAY, A.C. GENERATOR E-19-18
STAY, FUEL STRAINER..... E-18-1-15
STAY, PLATE..... E-18-10-36
STAY, POWER TILT SWITCH..... F-8-20-3
STAY, VAPOR SEPARATOR..... E-18-10-37
STOPPER SET, SLEEVE E-21-8
STOPPER(TOOL) E-9-9
STOPPER, TILT F-10-18
STRAINER ASSY., VTC E-9-20-10
STRAINER COMP., FUEL E-18-1-11
STRAINER COMP., OIL..... E-6-4
STRAINER, FUEL E-18-1-12
STRAINER, FUEL PUMP..... E-18-9
SUB HARNESS ASSY., POWER..... FOP-8-19
SUB HARNESS ASSY., POWER..... FOP-8-2-20
SUB HARNESS ASSY., POWER..... FOP-8-2-21
SUB HARNESS ASSY., POWER..... FOP-8-4-16
SUSPENSION, STRAINER..... E-18-10
SUSPENSION, STRAINER..... E-18-1-16
SWITCH ASSY., COMBINATION FOP-6-1-7
SWITCH ASSY., COMBINATION FOP-8-6-38
SWITCH ASSY., EMERGENCY STOP..... FOP-6-1-8
SWITCH ASSY., EMERGENCY STOP..... FOP-8-6-41
SWITCH ASSY., MAGNET E-21-12
SWITCH ASSY., NEUTRAL..... F-2-22
SWITCH ASSY., POWER TILT F-8-20-2
SWITCH ASSY., POWER TRIM-TILT FOP-8-20
SWITCH ASSY., POWER TRIM-TILT FOP-8-2-22
SWITCH ASSY., POWER TRIM-TILT FOP-8-2-23
SWITCH ASSY., POWER TRIM-TILT FOP-8-4-17
SWITCH ASSY., POWER TRIM-TILT FOP-8-6-39
SWITCH ASSY., TROLLING CONTROL... FOP-12-1
<T>
TAB, TRIM F-3-8
TACHOMETER HOUR METER (BLACK) .. FOP-2-4
TANK, OIL F-11-27
TENSIONER ASSY., CAM CHAIN..... E-9-8
TENSIONER COMP., BALANCER..... E-10-6
TERMINAL, CABLE FOP-8-16
TERMINAL, CABLE FOP-8-2-17
TERMINAL, CABLE FOP-8-4-12
THERMOSTAT ASSY. E-9-10-3
THERMOSTAT ASSY. E-9-10-4
THROTTLE BODY ASSY. E-15-2
TIE, CABLE..... FOP-11-5
TIE, CABLE(NATURAL)(2.4X92)..... FOP-6-12
TIE, CABLE(NATURAL)(2.4X92)..... FOP-8-6-37
T-JOINT E-18-15
T-JOINT F-9-3
TRIM METER ASSY (BLACK)..... FOP-2-1
TRIM-TILT ASSY., POWER..... F-11-11
TUBE A, WATER RELIEF..... E-4-10-4
TUBE ASSY. D, FUEL..... E-18-1-8
TUBE B, AIR VENT E-18-3
TUBE B, FUEL E-18-11
TUBE B, WATER RELIEF E-4-10-5
TUBE C, FUEL E-18-1-7
TUBE COMP. A, FUEL..... E-18-1-6
TUBE COMP. B, FUEL..... E-18-7
TUBE COMP. C, AIR VENT..... E-18-2
TUBE COMP. E, FUEL E-18-1-10
TUBE COMP. E, WATER..... E-4-10-7
TUBE COMP., AIR VENT..... E-18-4
TUBE COMP., WATER RELIEF..... E-4-10-3
TUBE D, FUEL..... E-18-8
TUBE D, FUEL..... E-18-1-9
TUBE F, FUEL E-18-10-39
TUBE F, WATER F-9-10
TUBE G, WATER..... E-18-16
TUBE KIT, SPEED SENSOR..... FOP-13-1
TUBE, 12X740 ..... E-15-25
TUBE, 5X140..... F-3-22
TUBE, 5X270..... F-3-
TUBE, 5X950(95005-50001-30M) FOP-13-13
TUBE, 7X120..... E-4-10-14
TUBE, 7X160..... F-9-38
TUBE, 7X200..... F-9-39
TUBE, 7X40..... F-9-37
TUBE, 7X75..... E-4-10-12
TUBE, 7X90..... E-4-10-13
TUBE, FUEL, 3.5X430..... E-18-31
TUBE, FUEL, 8X300..... F-9-36
TUBE, OIL..... E-4-10-1
TUBE, PRESSURE REGULATOR E-14-7
TUBE, SPEED SENSOR..... FOP-13-6
TUBE, SPIRAL F-11-3
TUBE, SPIRAL FOP-13-4
TUBE, VINYL, 4X7X160 ..... E-15-24
TUBE, WATER RELIEF..... F-9-9
TUBE, WATER(L) F-4-7
TUBE, WATER(XL)..... F-4-
<V>
VALVE ASSY., ELECTRONIC AIR E-14-17
VALVE ASSY., RELIEF F-9-16
VALVE COMP., MANUAL F-11-23
VALVE COMP., RESERVOIR..... F-11-24
VALVE SET, FLOAT E-18-10-1
VALVE, CHECK..... E-18-17
VALVE, EX..... E-9-19
VALVE, FLASH F-9-17
VALVE, IN..... E-9-18
VALVE, RELIEF E-5-5
<W>
WASHER F-2-35
WASHER, 10MM F-10-42
WASHER, 26MM F-3-20-14
WASHER, 28MM FOP-8-6-61
WASHER, 6MM FOP-8-6-59
WASHER, DRAIN PLUG, 12MM..... E-6-17
WASHER, DRAIN PLUG, 20MM..... E-5-24
WASHER, DRAIN PLUG, 20MM..... E-9-20-24
WASHER, HEAD COVER E-1-7
WASHER, LOCK, 5MM..... FOP-8-30
WASHER, LOCK, 5MM..... FOP-8-2-35
WASHER, LOCK, 5MM..... FOP-8-4-26
WASHER, LOCK, 6MM..... FOP-8-32
WASHER, LOCK, 6MM..... FOP-8-2-37
WASHER, PIVOT F-2-7
WASHER, PIVOT F-4-1
WASHER, PLAIN E-18-10-24
WASHER, PLAIN E-18-10-25
WASHER, PLAIN, 10MM F-5-18
WASHER, PLAIN, 10MM F-8-10-26
WASHER, PLAIN, 10MM F-10-43
WASHER, PLAIN, 10MM F-10-47
WASHER, PLAIN, 12MM E-6-16
WASHER, PLAIN, 12MM F-2-34
WASHER, PLAIN, 12MM F-3-20-15
WASHER, PLAIN, 12MM F-4-22
WASHER, PLAIN, 12MM F-8-11
WASHER, PLAIN, 12MM F-10-44
WASHER, PLAIN, 12MM F-10-45
WASHER, PLAIN, 12MM F-10-46
WASHER, PLAIN, 4MM FOP-8-6-55
WASHER, PLAIN, 5MM FOP-6-1-18
WASHER, PLAIN, 5MM FOP-8-31
WASHER, PLAIN, 5MM FOP-8-33
WASHER, PLAIN, 5MM FOP-8-2-36
WASHER, PLAIN, 5MM FOP-8-2-38
WASHER, PLAIN, 5MM FOP-8-6-56
WASHER, PLAIN, 5MM FOP-8-6-57
WASHER, PLAIN, 6MM F-2-36
WASHER, PLAIN, 6MM F-8-10
WASHER, PLAIN, 6MM FOP-8-4-27
WASHER, PLAIN, 6MM FOP-8-6-58
WASHER, PLAIN, 8MM F-2-37

WASHER, PLAIN, 8MM F-7-10-14
WASHER, PLAIN, 8MM F-8-10-25
WASHER, PLAIN, 8MM F-8-10-28
WASHER, PLAIN, 8MM FOP-8-6-60
WASHER, PROPELLER F-5-16
WASHER, PROPELLER THRUST..... F-5-14
WASHER, SEALING(22MM) E-3-7
WASHER, SEALING, 28MM..... E-3-31
WASHER, SEALING, 6MM..... E-18-10-49
WASHER, SHIFT SHAFT..... F-2-33
WASHER, SPRING, 4MM..... FOP-12-9
WASHER, SPRING, 5MM..... FOP-6-1-19
WASHER, THRUST..... E-7-10
WASHER, THRUST..... E-9-17
WASHER, THRUST BEARING F-5-15
WASHER, THRUST, 34MM F-10-41
WASHER, WAVE, 10MM F-8-10-27
WASHER, WAVE, 26MM F-10-40
WASHER, WAVE, 40MM F-10-39
WHEEL, ACCELERATOR..... FOP-8-6-20
WHEEL, CONTROL FOP-8-6-13
WIRE, LEAD(1.5X116MM)..... F-11-9
WIRE, LEAD(1.5X137MM)..... F-3-20-3
WRENCH, EYE, 19MM F-13-11
WRENCH, HEX., 6MM F-13-6
WRENCH, PLUG..... F-13-5
<Y>
YOKE ASSY..... F-11-7
YOKE COMP. E-21-4

INDEX (Parts Number)

332-70201-0 . . . . . .F-6-8
3C7-70211-1 . . . . . .F-6-4
3C7-70217-0 . . . . . .F-6-5
3C7-70220-1 . . . . . .F-6-2
3C7-70224-1 . . . . . .F-6-3
3PU-72537-0 . . . . . .FOP-2-6
3PV-72571-0 . . . . . .FOP-2-1
3PV-72637-0 . . . . . .FOP-2-4
3T1-70200-1 . . . . . .F-6-1
98AB-701600. . . . . .F-6-7
98AB-70-700 . . . . . .F-6-6
H121-51640-730. . . . . .E-14-19
H341-38403-672. . . . . .FOP-6-1-12
H341-38403-672. . . . . .FOP-8-6-45
H460-89221-840. . . . . .F-13-6
H538-89102-000. . . . . .F-13-1
H538-89103-000. . . . . .F-13-2
H723-90472-000. . . . . .F-4-22
H750-90628-000. . . . . .FOP-13-12
H759-16911-003. . . . . .E-18-9
H763-75538-C01. . . . . .F-2-26
H763-90681-A01 . . . . .F-10-49
H800-91303-000. . . . . .F-9-34
H805-91301-000. . . . . .E-3-36
H881-90105-000. . . . . .F-4-17
H881-90110-000. . . . . .F-10-30
H921-15611-000. . . . . .E-3-12
H921-17936-000. . . . . .F-2-7
H921-17936-000. . . . . .F-4-1
H921-90302-000. . . . . .F-8-20-17
H921-90302-000. . . . . .FOP-6-1-16
H921-90302-000. . . . . .FOP-8-6-53
H921-90504-010. . . . . .F-8-10
H921-90504-010. . . . . .FOP-8-6-58
H921-90511-000. . . . . .F-10-43
H921-90512-010. . . . . .FOP-8-6-59
H921-90518-000. . . . . .F-2-37
H921-90518-000. . . . . .F-8-10-28
H921-90518-000. . . . . .FOP-8-6-60
H921-90602-000. . . . . .FOP-13-11
H952-32901-770. . . . . .FOP-6-12
H952-32901-770. . . . . .FOP-8-6-37
HCO-92101-04020-4J. . .FOP-12-7
HCO-92101-05016-4J. . .FOP-8-6-68
HCO-92101-06050-4J. . .F-3-20
HCO-93500-05010-4J. . .FOP-8-6-69
HCO-93500-05065-4J. . .FOP-8-34
HCO-93500-05065-4J. . .FOP-8-2-39
HCO-93500-06018-4J. . .E-4-18
HCO-93500-06025-4J. . .F-8-20-22
HCO-93600-06016-0A . .E-5-23
HCO-93700-05050-4J. . .F-3-21
HCO-93901-250J0. . . . .FOP-8-6-70
HCO-93901-251J0. . . . .FOP-8-6-71
HCO-93901-252J0. . . . .FOP-8-6-72
HCO-93903-254G0 . . . .E-13-9
HCO-93903-262J0. . . . .FOP-8-6-73
HCO-93905-255J0. . . . .FOP-8-6-74
HCO-93913-142J0. . . . .F-8-13
HCO-94001-04490-0S . .FOP-12-8
HCO-94001-05490-0S . .F-2-48
HCO-94001-05490-0S . .FOP-8-35
HCO-94001-05490-0S . .FOP-8-2-40
HCO-94001-06080-0S . .E-19-31
HCO-94001-06490-0S . .FOP-8-6-75
HCO-94001-06490-0S . .FOP-9-5
HCO-94001-12490-0S . .F-10-54
HCO-94002-05490-0S . .FOP-8-6-76
HCO-94002-06490-0S . .F-8-14
HCO-94103-05400 . . . .FOP-6-1-18
HCO-94109-20000 . . . .E-5-24
HCO-94109-20000 . . . .E-9-20-24
HCO-94111-04500 . . . .FOP-12-9
HCO-94111-05400 . . . .FOP-6-1-19
HCO-94301-06100 . . . .E-6-19
HCO-94301-08100 . . . .E-10-13
HCO-94301-10120 . . . .E-7-17
HCO-94301-10160 . . . .E-5-25
HCO-94301-10160 . . . .E-6-20
HCO-94301-10160 . . . .E-9-20-25
HCO-94301-12160 . . . .E-10-14
HCO-94301-14200 . . . .E-5-26
HCO-94301-14200 . . . .E-6-21
HCO-94301-14200 . . . .E-9-20-26
HCO-94305-25203 . . . .F-10-55
HCO-94510-14000 . . . .F-5-28
HCO-94540-03029 . . . .FOP-8-6-77
HCO-94540-04029 . . . .F-2-49
HCO-94540-04029 . . . .FOP-8-6-78
HCO-94540-06029 . . . .F-2-50
HCO-94540-06029 . . . .F-8-10-29
HCO-94540-06029 . . . .FOP-8-36
HCO-94540-06029 . . . .FOP-8-2-41
HCO-94540-06029 . . . .FOP-8-4-28
HCO-94540-07029 . . . .FOP-8-6-79
HCO-94540-10019 . . . .F-4-35
HCO-94540-12029 . . . .F-2-51
HCO-94540-15029 . . . .F-11-47
HCO-95001-35430-40 . .E-18-31
HCO-95001-80300-40 . .F-9-36
HCO-95003-07016-31 . .E-15-24
HCO-95005-12740-20 . .E-15-25
HCO-95005-50140-30 . .F-3-22
HCO-95005-50270-30 . .F-3-
HCO-95005-50950-30 . .FOP-13-13
HCO-95005-70040-30 . .F-9-37
HCO-95005-70075-30 . .E-4-10-12
HCO-95005-70090-30 . .E-4-10-13
HCO-95005-70120-30 . .E-4-10-14
HCO-95005-70160-30 . .F-9-38
HCO-95005-70200-30 . .F-9-39
HCO-95011-62000 . . . .F-8-20-23
HCO-95701-06014-08 . .E-10-15
HCO-95701-06018-09 . .E-6-22
HCO-95701-06020-08 . .E-9-34
HCO-95701-06020-08 . .E-9-20-27
HCO-95701-06030-08 . .E-9-35
HCO-95701-06032-08 . .E-9-20-28
HCO-95701-08032-08 . .E-5-27
HCO-95701-08050-08 . .E-10-16
HCO-95701-08075-08 . .E-10-17
HCO-95701-08090-08 . .E-9-20-29
HCO-95701-08110-08 . .E-9-20-30
HCO-95701-10105-08 . .E-10-18
HCO-95701-10110-09 . .E-6-23
HCO-95801-08035-09 . .F-10-56
HCO-96211-07000 . . . .F-5-29
HCO-96211-09000 . . . .F-5-30
HCO-96220-50080 . . . .E-5-28
HCO-96300-06025-00 . .E-10-19
HCO-96300-06032-00 . .E-10-20
HCO-9807B-5615P E-20-4
HCO-9807B-5615W E-20-
HCO-9807B-5617P E-20-
HCO-9807B-5617W E-20-
HCO-98200-41000 . . . .F-7-20-10
HCO-98200-41500 . . . .F-7-20-11
HCO-98200-43000 . . . .F-7-20-12
HCO-99006-19000 . . . .F-13-11
HCO-99008-02300 . . . .F-13-12
HGE1-17357-670 . . . . .FOP-13-2
HGEV-90650-003 . . . . .E-14-30
HGHB-16163-610 . . . . .E-18-1
HGHB-16163-610 . . . . .F-9-2
HHC4-90653-900 . . . . .F-8-20-19
HHN0-91305-A00 . . . . .E-4-15
HKJ2-90683-003. . . . . .F-8-20-20
HKM3-32161-003 . . . . .F-3-2
HKM3-32161-003 . . . . .FOP-13-3
HKV7-17368-671. . . . . .E-18-13
HMB0-91359-000 . . . . .F-4-33
HMG9-35701-950 . . . . .F-8-10-1
HMG9-35701-950 . . . . .FOP-8-6-40
HMJ0-91301-003 . . . . .E-14-32
HMJ0-91301-003 . . . . .E-18-10-51
HMM4-90105-000. . . . .FOP-8-6-50
HMM8-90501-610. . . . .F-8-10-25
HMM8-90502-610. . . . .F-8-10-26
HMN5-17195-000 . . . . .F-9-3
HMR5-16966-000 . . . . .E-18-1-19
HMT8-18334-770 . . . . .FOP-6-1-2
HMY1-16959-000 . . . . .E-4-10-2
HMY5-91005-601 . . . . .F-5-20
HMZ5-16952-000 . . . . .E-18-11
HP01-91212-003. . . . . .E-5-21
HP0X-91321-003. . . . . .F-2-46
HP2A-37881-000 . . . . .E-15-14
HP5A-13115-000 . . . . .E-7-4
HP64-31141-003. . . . . .E-19-6
HP8A-13204-A01 . . . . .E-7-5
HPA9-91317-003 . . . . .E-18-26
HPC6-15233-000. . . . . .E-5-7
HPC6-90715-000. . . . . .E-3-33
HPC6-91324-000. . . . . .E-6-18
HPCX-12342-004 . . . . .E-1-3
HPCX-90017-013 . . . . .E-7-15
HPD1-31138-004 . . . . .E-19-5
HPD1-31142-004 . . . . .E-19-7
HPD1-31148-004 . . . . .E-19-11
HPD1-90231-014 . . . . .E-19-30
HPD6-90430-003 . . . . .E-18-10-49
HPE0-15231-000. . . . . .E-5-5
HPE0-90703-000. . . . . .E-3-32
HPE9-31145-941. . . . . .E-19-8
HPE9-31152-942. . . . . .E-19-13
HPFB-30522-007. . . . . .E-20-2
HPG6-15232-000 . . . . .E-5-6
HPGK-37835-A01 . . . . .E-15-12
HPH1-90015-013 . . . . .E-5-16
HPH3-90011-000 . . . . .E-5-15
HPJ7-31111-013 . . . . .E-19-3
HPJ7-31114-013 . . . . .E-19-4
HPJ7-31146-003 . . . . .E-19-9
HPJ7-91309-010 . . . . .F-9-35
HPK1-32742-003. . . . . .F-7-30-3
HPK2-91307-005. . . . . .E-9-10-25
HPLC-37880-004. . . . . .E-15-13
HPLC-91301-000. . . . . .E-14-33
HPM3-90206-004 . . . . .E-9-30
HPNA-11106-300 . . . . .E-3-2
HPNA-11135-000 . . . . .E-3-4
HPNA-12204-305 . . . . .E-9-20-2
HPNA-12205-305 . . . . .E-9-20-3
HPNA-12341-000 . . . . .E-1-2
HPNA-13111-010 . . . . .E-7-3
HPNA-13321-003 . . . . .E-7-9
HPNA-13322-003 . . . . .E-7-
HPNA-13323-003 . . . . .E-7-
HPNA-13324-003 . . . . .E-7-
HPNA-13325-003 . . . . .E-7-
HPNA-13326-003 . . . . .E-7-
HPNA-13341-003 . . . . .E-7-11
HPNA-13342-003 . . . . .E-7-
HPNA-13343-003 . . . . .E-7-
HPNA-13344-003 . . . . .E-7-
HPNA-13345-003 . . . . .E-7-
HPNA-13346-003 . . . . .E-7-
HPNA-13432-000 . . . . .E-10-4
HPNA-13441-004 . . . . .E-10-5
HPNA-13450-004 . . . . .E-10-6
HPNA-13460-004 . . . . .E-10-7
HPNA-13622-003 . . . . .E-7-13
HPNA-14114-003 . . . . .E-9-2
HPNA-14115-000 . . . . .E-9-3
HPNA-14210-000 . . . . .E-9-5
HPNA-14511-003 . . . . .E-9-9
HPNA-14711-000 . . . . .E-9-18
HPNA-14744-004 . . . . .E-9-20
HPNA-14762-003 . . . . .E-9-23
HPNA-17055-004 . . . . .E-14-11
HPNA-90003-000 . . . . .E-9-27
HPNA-90004-000 . . . . .E-10-9
HPNA-90005-003 . . . . .E-9-20-15
HPNA-90006-003 . . . . .E-3-21
HPNA-90011-003 . . . . .E-9-20-16
HPNA-90031-004 . . . . .E-10-11
HPNA-90032-000 . . . . .E-9-28
HPNA-90042-003 . . . . .E-9-29
HPNA-90703-300 . . . . .E-9-32
HPNA-90704-000 . . . . .E-7-16
HPNA-90715-000 . . . . .E-3-34
HPNA-91214-014 . . . . .E-3-35
HPNA-91302-003 . . . . .E-14-34
HPNA-91302-004 . . . . .E-9-10-23
HPNA-91307-003 . . . . .E-3-38
HPNA-91307-003 . . . . .E-4-16
HPNA-91307-003 . . . . .E-9-10-26
HPNA-91333-003 . . . . .E-9-10-27
HPNA-91333-003 . . . . .E-9-20-23
HPNB-37500-003 . . . . .E-9-10-13
HPNB-37510-003 . . . . .E-9-20-13
HPNC-91212-004 . . . . .E-9-10-22
HPNE-14631-000 . . . . .E-9-15
HPP4-90009-E01. . . . . .E-18-10-44
HPPA-13210-000 . . . . .E-7-6
HPPA-13310-000 . . . . .E-7-8
HPPA-14520-003 . . . . .E-9-10
HPPA-14530-003 . . . . .E-9-11
HPR3-91319-003. . . . . .E-3-39
HPR4-11106-013. . . . . .E-3-3
HPR4-90401-000. . . . . .E-3-31
HPRA-15290-000 . . . . .E-3-10
HPRB-14721-A00 . . . . .E-9-19
HPRB-15280-A00 . . . . .E-3-9
HPS4-36454-003. . . . . .E-14-16
HPT0-14744-004. . . . . .E-9-21
HPT0-14775-000. . . . . .E-9-25
HPT0-31147-003. . . . . .E-19-10
HPT0-90206-004. . . . . .E-9-31
HPT2-91005-N01 . . . . .F-5-21
HPY3-17249-000. . . . . .E-15-3
HPY3-31215-004. . . . . .E-21-3
HPY3-31218-004. . . . . .E-21-6
HPZ1-12210-003. . . . . .E-9-20-4
HPZ1-12210-004. . . . . .E-9-20-
HPZ1-12211-003. . . . . .E-9-20-5
HPZ1-12211-004. . . . . .E-9-20-
HPZ1-31105-003. . . . . .E-19-2
HPZ1-31149-003. . . . . .E-19-12
HPZ1-31153-003. . . . . .E-19-14
HR40-14401-A01 . . . . .E-9-7
HR40-14633-A00 . . . . .E-9-16
HR40-15115-A01 . . . . .E-10-8
HRAA-13620-A02 . . . . .E-7-12
HRAA-14620-A00 . . . . .E-9-13
HRAA-14624-A00 . . . . .E-9-14
HRAA-14647-A00 . . . . .E-9-17
HRAA-14765-A00 . . . . .E-9-24
HRAA-15815-A02 . . . . .E-9-20-7
HRAA-15845-A01 . . . . .E-9-20-11
HRAD-13410-010 . . . . .E-10-2
HRAD-13420-010 . . . . .E-10-3
HRGM-14781-A01. . . . . .E-9-26
HRNA-37260-A01 . . . . .E-3-17
HRNA-37830-A01 . . . . .E-15-11
HRRA-30520-007 . . . . .E-20-1
HRTA-15400-004 . . . . .E-5-10
HRWC-14540-A02. . . . . .E-9-12
HS0A-91541-003. . . . . .E-3-40
HS0A-91541-003. . . . . .F-7-6
HS0A-91541-003. . . . . .F-7-10-16
HSA0-90683-003. . . . . .E-18-1-24
HSB2-90687-003. . . . . .E-14-31
HSB2-90687-003. . . . . .F-7-10-15
HSB6-91475-000. . . . . .FOP-8-6-65
HSC2-90649-003. . . . . .FOP-6-1-17
HSDA-39794-004 . . . . .F-7-20-5
HSE0-53740-953. . . . . .E-18-18
HSE0-91547-003. . . . . .E-18-27
HSF1-91595-003. . . . . .E-15-23
HSH3-91599-A32 . . . . .E-18-30
HSM4-32134-003 . . . . .F-7-30-2
HSM4-91558-003 . . . . .E-18-29
HSP0-91546-A01 . . . . .E-9-10-28
HSP0-91546-A01 . . . . .E-13-7
HSTK-91540-003. . . . . .FOP-11-6

HSV1-91549-L01. . . . . .F-2-47
HSV4-91540-003. . . . . .E-4-17
HSZ5-91531-003. . . . . .E-13-6
HVD6-91360-003 . . . . . .E-5-22
HVM0-16965-771 . . . . . .E-18-12
HVM0-16965-771 . . . . . .F-7-30-1
HVM0-46391-003 . . . . . .F-2-24
HZB5-90626-730. . . . . .F-8-20-18
HZC0-63515-700 . . . . . .F-8-10-21
HZE2-16731-003. . . . . .E-18-1-1
HZE2-90601-000. . . . . .E-6-17
HZH8-87522-W41 . . . . . .F-12-7
HZV0-90604-000. . . . . .E-18-24
HZV0-90604-000. . . . . .E-18-1-23
HZV0-90604-000. . . . . .F-9-30
HZV1-24210-010. . . . . .F-10-2
HZV1-90127-010. . . . . .E-15-20
HZV3-90601-030. . . . . .E-15-21
HZV4-24221-010. . . . . .F-10-3
HZV4-36182-651. . . . . .FOP-6-1-9
HZV4-36182-651. . . . . .FOP-8-6-42
HZV4-36187-652. . . . . .FOP-6-1-10
HZV4-36187-652. . . . . .FOP-8-6-43
HZV4-90302-000. . . . . .F-3-17
HZV4-90304-000. . . . . .FOP-8-6-54
HZV4-90502-000. . . . . .FOP-8-31
HZV4-90502-000. . . . . .FOP-8-2-36
HZV4-90502-000. . . . . .FOP-8-6-57
HZV4-90512-000. . . . . .F-2-36
HZV4-90514-000. . . . . .F-10-42
HZV5-12155-000. . . . . .E-4-1
HZV5-12214-000. . . . . .E-3-7
HZV5-16881-000. . . . . .E-18-8
HZV5-17202-310. . . . . .F-9-4
HZV5-17838-000. . . . . .F-2-1
HZV5-24811-010. . . . . .FOP-8-6-2
HZV5-24812-000. . . . . .FOP-8-6-3
HZV5-24813-000. . . . . .FOP-8-6-4
HZV5-24814-010. . . . . .FOP-8-6-5
HZV5-24815-010. . . . . .FOP-8-6-6
HZV5-24816-000. . . . . .FOP-8-6-7
HZV5-24817-000. . . . . .FOP-8-6-8
HZV5-24818-003. . . . . .FOP-8-6-9
HZV5-24820-010. . . . . .FOP-8-6-10
HZV5-24830-010. . . . . .FOP-8-6-11
HZV5-24836-000. . . . . .FOP-8-6-12
HZV5-24841-000. . . . . .FOP-8-6-13
HZV5-24845-000. . . . . .FOP-8-6-14
HZV5-24850-000. . . . . .FOP-8-6-15
HZV5-24854-000. . . . . .FOP-8-6-16
HZV5-24855-000. . . . . .FOP-8-6-17
HZV5-24860-000. . . . . .FOP-8-6-18
HZV5-24865-000. . . . . .FOP-8-6-19
HZV5-24875-000. . . . . .FOP-8-6-20
HZV5-24876-000. . . . . .FOP-8-6-21
HZV5-24878-000. . . . . .FOP-8-6-22
HZV5-24881-000. . . . . .FOP-8-6-23
HZV5-24883-000. . . . . .FOP-8-6-24
HZV5-24884-000. . . . . .FOP-8-6-25
HZV5-24885-000. . . . . .FOP-8-6-26
HZV5-24887-000. . . . . .FOP-8-6-27
HZV5-24891-000. . . . . .FOP-8-6-28
HZV5-24892-000. . . . . .FOP-8-6-29
HZV5-24894-000. . . . . .FOP-8-6-30
HZV5-24895-000. . . . . .FOP-8-6-31
HZV5-24897-000. . . . . .FOP-8-6-32
HZV5-24898-000. . . . . .FOP-8-6-33
HZV5-32823-003. . . . . .FOP-6-1-5
HZV5-32823-003. . . . . .FOP-8-6-35
HZV5-32823-003. . . . . .FOP-11-3
HZV5-32824-003. . . . . .FOP-6-1-6
HZV5-32824-003. . . . . .FOP-8-6-36
HZV5-32824-003. . . . . .FOP-11-4
HZV5-35370-823. . . . . .FOP-8-6-39
HZV5-36104-821. . . . . .F-11-3
HZV5-36136-821. . . . . .F-11-8
HZV5-36180-033. . . . . .FOP-6-1-8
HZV5-36180-033. . . . . .FOP-8-6-41
HZV5-38410-003. . . . . .FOP-6-1-13
HZV5-38410-003. . . . . .FOP-8-6-46
HZV5-40102-000. . . . . .E-13-4
HZV5-40102-000. . . . . .E-15-15
HZV5-41171-000. . . . . .F-3-10
HZV5-41171-000. . . . . .FOP-13-5
HZV5-41172-000. . . . . .F-3-11
HZV5-50214-003. . . . . .F-11-10
HZV5-50522-000. . . . . .F-10-16
HZV5-56117-821. . . . . .F-11-18
HZV5-56118-820. . . . . .F-11-19
HZV5-56513-000. . . . . .F-11-25
HZV5-90081-010. . . . . .E-3-26
HZV5-90081-010. . . . . .E-5-19
HZV5-90119-000. . . . . .F-3-20-12
HZV5-90119-000. . . . . .F-11-33
HZV5-90119-000. . . . . .FOP-13-9
HZV5-90125-000. . . . . .FOP-8-6-52
HZV5-90127-003. . . . . .F-8-20-15
HZV5-90127-003. . . . . .FOP-13-10
HZV5-90131-000. . . . . .E-6-15
HZV5-90302-003. . . . . .F-2-32
HZV5-90304-013. . . . . .F-10-34
HZV5-90307-003. . . . . .F-10-38
HZV5-90501-000. . . . . .F-10-39
HZV5-90502-000. . . . . .F-10-40
HZV5-90504-000. . . . . .F-10-41
HZV5-90552-000. . . . . .F-10-44
HZV5-90557-000. . . . . .FOP-8-6-61
HZV5-90559-000. . . . . .E-6-16
HZV5-90559-000. . . . . .F-10-45
HZV5-90559-000. . . . . .F-10-46
HZV5-90563-000. . . . . .F-5-18
HZV5-90563-000. . . . . .F-10-47
HZV5-90651-000. . . . . .F-10-48
HZV5-90751-000. . . . . .FOP-8-6-62
HZV5-90756-000. . . . . .F-3-18
HZV5-90756-000. . . . . .F-3-20-17
HZV5-90756-000. . . . . .F-4-25
HZV5-90772-000. . . . . .FOP-8-6-63
HZV5-91151-000. . . . . .FOP-8-6-64
HZV5-91203-821. . . . . .F-11-35
HZV5-91256-003. . . . . .F-10-51
HZV5-91302-821. . . . . .F-11-37
HZV5-91316-821. . . . . .F-11-38
HZV5-91352-000. . . . . .F-10-52
HZV5-91553-010. . . . . .E-13-8
HZV5-91553-010. . . . . .E-15-22
HZV5-91553-010. . . . . .E-20-10-6
HZV5-91553-010. . . . . .F-7-10-17
HZV5-91560-000. . . . . .F-10-53
HZV5-91567-000. . . . . .FOP-8-6-66
HZV5-91570-000. . . . . .FOP-8-6-67
HZV7-90508-000. . . . . .F-2-35
HZV7-90951-010. . . . . .F-10-50
HZW1-06411-020 . . . . . .F-10-1
HZW1-12217-010 . . . . . .E-5-1
HZW1-15665-020 . . . . . .F-9-1
HZW1-19210-B04 . . . . . .F-4-2
HZW1-19210-B04 . . . . . .FOP-10-2
HZW1-19210-B04 . . . . . .FOP-10-1-2
HZW1-19223-B00 . . . . . .F-4-4
HZW1-19223-B00 . . . . . .FOP-10-1-4
HZW1-19252-000 . . . . . .E-6-6
HZW1-19253-B01 . . . . . .F-4-8
HZW1-19253-B01 . . . . . .FOP-10-1-7
HZW1-19286-B00 . . . . . .F-3-1
HZW1-24102-B00 . . . . . .F-5-2
HZW1-24103-B00 . . . . . .F-5-3
HZW1-24327-000 . . . . . .F-2-11
HZW1-31229-004 . . . . . .E-21-8
HZW1-31247-004 . . . . . .E-21-15
HZW1-31249-004 . . . . . .E-21-16
HZW1-31250-004 . . . . . .E-21-17
HZW1-31261-004 . . . . . .E-21-18
HZW1-38551-000 . . . . . .F-7-10-8
HZW1-40107-700 . . . . . .F-8-10-3
HZW1-40204-000 . . . . . .F-4-12
HZW1-40210-710 . . . . . .F-3-20-2
HZW1-41102-B00 . . . . . .F-3-4
HZW1-41109-B00 . . . . . .F-3-9
HZW1-41116-B00 . . . . . .F-4-14
HZW1-50111-010ZC F-3-20-4
HZW1-50156-010 . . . . . .F-3-20-6
HZW1-50161-020ZC F-3-20-7
HZW1-50201-040ZC F-10-9
HZW1-50214-000 . . . . . .F-10-11
HZW1-50301-070ZC F-10-12
HZW1-50311-070ZC F-10-13
HZW1-50527-000 . . . . . .F-10-17
HZW1-50529-000 . . . . . .F-10-18
HZW1-53234-010 . . . . . .F-10-19
HZW1-53238-010 . . . . . .F-10-21
HZW1-56110-701 . . . . . .F-11-13
HZW1-56113-701 . . . . . .F-11-14
HZW1-56115-305 . . . . . .F-11-15
HZW1-56116-701 . . . . . .F-11-17
HZW1-56120-305 . . . . . .F-11-20
HZW1-56130-702 . . . . . .F-11-22
HZW1-56180-701 . . . . . .F-11-24
HZW1-56516-000 . . . . . .F-10-22
HZW1-56532-000 . . . . . .F-11-26
HZW1-56539-000 . . . . . .F-10-23
HZW1-56851-703 . . . . . .F-11-27
HZW1-56860-701 . . . . . .F-11-28
HZW1-90013-000 . . . . . .E-13-5
HZW1-90013-000 . . . . . .E-15-17
HZW1-90014-000 . . . . . .E-14-20
HZW1-90014-000 . . . . . .E-18-20
HZW1-90014-000 . . . . . .E-18-10-45
HZW1-90102-000 . . . . . .F-10-26
HZW1-90105-000 . . . . . .F-10-27
HZW1-90106-004 . . . . . .E-21-19
HZW1-90107-004 . . . . . .E-21-20
HZW1-90108-000 . . . . . .F-10-29
HZW1-90113-702 . . . . . .F-11-29
HZW1-90114-702 . . . . . .F-11-30
HZW1-90115-702 . . . . . .F-11-31
HZW1-90116-702 . . . . . .F-11-32
HZW1-90203-000 . . . . . .F-7-10-13
HZW1-90242-000 . . . . . .F-4-20
HZW1-90301-B00 . . . . . .F-5-13
HZW1-90304-013 . . . . . .F-10-35
HZW1-90501-710 . . . . . .F-3-20-14
HZW1-90518-B00 . . . . . .F-4-23
HZW1-90519-B00 . . . . . .F-4-
HZW1-90520-B00 . . . . . .F-4-
HZW1-90521-B00 . . . . . .F-4-
HZW1-90559-000 . . . . . .F-3-20-15
HZW1-90651-710 . . . . . .F-3-20-16
HZW1-90652-702 . . . . . .F-11-34
HZW1-90752-B02 . . . . . .F-4-24
HZW1-90752-B02 . . . . . .FOP-10-4
HZW1-90752-B02 . . . . . .FOP-10-1-9
HZW1-90758-B00 . . . . . .F-5-19
HZW1-91054-B31 . . . . . .F-4-27
HZW1-91101-003 . . . . . .F-5-25
HZW1-91207-013 . . . . . .F-11-36
HZW1-91352-702 . . . . . .F-11-39
HZW1-91353-703 . . . . . .F-11-40
HZW1-91354-701 . . . . . .F-11-41
HZW1-91355-701 . . . . . .F-11-42
HZW1-91356-B00 . . . . . .F-4-32
HZW1-91356-B00 . . . . . .FOP-10-5
HZW1-91356-B00 . . . . . .FOP-10-1-10
HZW1-91357-701 . . . . . .F-11-43
HZW1-91358-701 . . . . . .F-11-44
HZW1-91361-701 . . . . . .F-11-45
HZW1-91554-000 . . . . . .E-14-35
HZW1-91554-000 . . . . . .E-18-28
HZW1-91554-000 . . . . . .E-18-10-52
HZW1-91557-701 . . . . . .F-11-46
HZW2-90003-000 . . . . . .E-20-10-4
HZW2-90301-F00 . . . . . .E-14-29
HZW4-90108-000 . . . . . .FOP-8-6-51
HZW4-90126-000 . . . . . .E-14-26
HZW4-90151-000 . . . . . .E-14-27
HZW4-90156-000 . . . . . .E-3-28
HZW4-90162-000 . . . . . .E-3-29
HZW4-90162-000 . . . . . .E-9-10-21
HZW4-90163-000 . . . . . .E-19-28
HZW4-90164-000 . . . . . .E-21-21
HZW4-90170-000 . . . . . .E-4-11
HZW4-90306-003 . . . . . .F-10-37
HZW4-90401-000 . . . . . .FOP-8-6-55
HZW4-90402-000 . . . . . .FOP-8-6-56
HZW4-91301-003 . . . . . .F-3-19
HZW5-06241-U00 . . . . . .FOP-8-2
HZW5-06241-U10 . . . . . .FOP-8-2-2
HZW5-06900-U00 . . . . . .FOP-9-1
HZW5-15113-000 . . . . . .E-6-3
HZW5-15331-003 . . . . . .E-5-8
HZW5-15341-003 . . . . . .E-5-9
HZW5-16081-010 . . . . . .E-18-10-20
HZW5-16086-000 . . . . . .E-18-10-23
HZW5-16087-000 . . . . . .E-18-10-24
HZW5-16708-003 . . . . . .E-18-10-28
HZW5-16715-023 . . . . . .E-18-10-29
HZW5-16733-000 . . . . . .E-18-10-34
HZW5-16915-000 . . . . . .E-18-10
HZW5-24810-U01 . . . . . .FOP-8-3
HZW5-24810-U01 . . . . . .FOP-8-2-3
HZW5-24810-U11 . . . . . .FOP-8-2-4
HZW5-24811-U01 . . . . . .FOP-8-4
HZW5-24811-U01 . . . . . .FOP-8-2-5
HZW5-24812-U01 . . . . . .FOP-8-5
HZW5-24812-U01 . . . . . .FOP-8-2-6
HZW5-24813-U01 . . . . . .FOP-8-6
HZW5-24813-U01. . . . . .FOP-8-2-7
HZW5-24813-U21 . . . . . .FOP-8-2-8
HZW5-24814-U01 . . . . . .FOP-8-7
HZW5-24814-U01 . . . . . .FOP-8-2-9
HZW5-24815-U01 . . . . . .FOP-8-8
HZW5-24816-U01 . . . . . .FOP-8-9
HZW5-24816-U01 . . . . . .FOP-8-2-10
HZW5-24816-U01 . . . . . .FOP-8-4-8
HZW5-24817-U01 . . . . . .FOP-8-10
HZW5-24817-U01 . . . . . .FOP-8-2-11
HZW5-24818-U01 . . . . . .FOP-8-11
HZW5-24818-U01 . . . . . .FOP-8-2-12
HZW5-24819-U01 . . . . . .FOP-8-12
HZW5-24819-U01 . . . . . .FOP-8-2-13
HZW5-24820-U01 . . . . . .FOP-8-13
HZW5-24820-U21 . . . . . .FOP-8-2-14
HZW5-24825-U01 . . . . . .FOP-8-14
HZW5-24825-U01 . . . . . .FOP-8-2-15
HZW5-24826-U01 . . . . . .FOP-8-15
HZW5-24826-U01 . . . . . .FOP-8-2-16
HZW5-24826-U01 . . . . . .FOP-8-4-10
HZW5-24831-U01 . . . . . .FOP-8-16
HZW5-24831-U01 . . . . . .FOP-8-2-17
HZW5-24831-U01 . . . . . .FOP-8-4-12
HZW5-24832-U01 . . . . . .FOP-8-17
HZW5-24832-U01 . . . . . .FOP-8-2-18
HZW5-24832-U01 . . . . . .FOP-8-4-13
HZW5-24834-U01 . . . . . .FOP-8-18
HZW5-24834-U21 . . . . . .FOP-8-2-19
HZW5-31217-003 . . . . . .E-21-5
HZW5-31631-003 . . . . . .E-19-16
HZW5-31639-003 . . . . . .E-19-19
HZW5-31644-003 . . . . . .E-19-20
HZW5-31710-003 . . . . . .E-19-21
HZW5-32168-003 . . . . . .E-18-10-43
HZW5-35370-U02 . . . . . .FOP-8-20
HZW5-35370-U02 . . . . . .FOP-8-2-22
HZW5-35370-U12 . . . . . .FOP-8-2-23
HZW5-35673-003 . . . . . .E-9-10-11
HZW5-50151-000 . . . . . .F-10-6
HZW5-50155-000 . . . . . .F-3-20-5
HZW5-50341-010 . . . . . .F-10-14
HZW5-53234-010 . . . . . .F-10-20
HZW5-90002-013 . . . . . .E-5-14
HZW5-90011-010 . . . . . .E-19-23
HZW5-90018-000 . . . . . .E-5-18
HZW5-90018-000 . . . . . .E-9-20-19
HZW5-90018-000 . . . . . .E-20-10-5
HZW5-90018-000 . . . . . .F-7-20-8
HZW5-90021-U00 . . . . . .FOP-9-2
HZW5-90101-000 . . . . . .F-10-25
HZW5-90101-U00 . . . . . .FOP-8-22
HZW5-90101-U00 . . . . . .FOP-8-2-25
HZW5-90101-U00 . . . . . .FOP-8-4-20
HZW5-90102-U00 . . . . . .FOP-8-23
HZW5-90102-U00 . . . . . .FOP-8-2-26
HZW5-90103-U01 . . . . . .FOP-8-24
HZW5-90103-U01 . . . . . .FOP-8-2-27
HZW5-90104-U00 . . . . . .FOP-8-25
HZW5-90104-U00 . . . . . .FOP-8-2-28
HZW5-90105-U01 . . . . . .FOP-8-26
HZW5-90105-U01 . . . . . .FOP-8-2-29
HZW5-90106-U00 . . . . . .FOP-8-27
HZW5-90106-U00 . . . . . .FOP-8-2-30
HZW5-90107-U00 . . . . . .FOP-8-28
HZW5-90107-U00 . . . . . .FOP-8-2-31

HZW5-90108-U00 . . . . . FOP-8-2-32
HZW5-90109-000 . . . . . FOP-6-1-15
HZW5-90203-010 . . . . . E-19-29
HZW5-90301-U00 . . . . . FOP-8-29
HZW5-90301-U00 . . . . . FOP-8-2-33
HZW5-90302-003 . . . . . F-3-20-13
HZW5-90302-003 . . . . . F-10-33
HZW5-90302-U21 . . . . . FOP-8-2-34
HZW5-90303-000 . . . . . F-4-21
HZW5-90304-000 . . . . . F-10-36
HZW5-90501-000 . . . . . F-2-33
HZW5-90501-U00 . . . . . FOP-8-30
HZW5-90501-U00 . . . . . FOP-8-2-35
HZW5-90501-U00 . . . . . FOP-8-4-26
HZW5-90502-U00 . . . . . FOP-8-32
HZW5-90502-U00 . . . . . FOP-8-2-37
HZW5-90503-U00 . . . . . FOP-8-33
HZW5-90503-U00 . . . . . FOP-8-2-38
HZW5-90509-711 . . . . . F-5-15
HZW5-90511-U00 . . . . . FOP-9-3
HZW5-90512-U00 . . . . . FOP-9-4
HZW5-90601-030 . . . . . E-18-22
HZW5-90602-030 . . . . . E-18-1-22
HZW5-91056-003 . . . . . F-5-24
HZW5-91201-003 . . . . . E-5-20
HZW5-91202-003 . . . . . F-9-33
HZW5-91251-003 . . . . . F-2-44
HZW7-24810-U01 . . . . . FOP-8-4-2
HZW7-24811-U01 . . . . . FOP-8-4-3
HZW7-24812-U01 . . . . . FOP-8-4-4
HZW7-24813-U01 . . . . . FOP-8-4-5
HZW7-24814-U01 . . . . . FOP-8-4-6
HZW7-24815-U01 . . . . . FOP-8-4-7
HZW7-24817-U01 . . . . . FOP-8-4-9
HZW7-24830-U01 . . . . . FOP-8-4-11
HZW7-24832-U01 . . . . . FOP-8-4-14
HZW7-24833-U01 . . . . . FOP-8-4-15
HZW7-32530-U00 . . . . . FOP-8-19
HZW7-32530-U00 . . . . . FOP-8-2-20
HZW7-32530-U10 . . . . . FOP-8-2-21
HZW7-32530-U20 . . . . . FOP-8-4-16
HZW7-35370-U02 . . . . . FOP-8-4-17
HZW7-87701-U01 . . . . . FOP-8-4-18
HZW7-87703-U00 . . . . . FOP-8-4-19
HZW7-90101-U01 . . . . . FOP-8-4-21
HZW7-90102-U01 . . . . . FOP-8-4-22
HZW7-90103-U01 . . . . . FOP-8-4-23
HZW7-90104-U01 . . . . . FOP-8-4-24
HZW7-90301-U01 . . . . . FOP-8-4-25
HZW7-90502-U00 . . . . . FOP-8-4-27
HZW9-19279-000 . . . . . F-9-15
HZW9-19291-000 . . . . . F-9-17
HZW9-19297-000 . . . . . F-9-19
HZW9-19317-000 . . . . . F-9-20
HZW9-32114-730 . . . . . E-3-14
HZW9-87702-800 . . . . . FOP-8-6-48
HZW9-90008-000 . . . . . FOP-8-6-49
HZW9-90009-000 . . . . . F-10-24
HZW9-90011-000 . . . . . E-3-22
HZW9-90011-000 . . . . . E-9-10-14
HZW9-90011-000 . . . . . F-7-10-9
HZW9-90013-000 . . . . . F-7-3
HZW9-90013-000 . . . . . F-7-10-10
HZW9-90013-000 . . . . . F-7-20-7
HZW9-90016-000 . . . . . E-3-23
HZW9-90016-000 . . . . . E-5-17
HZW9-90016-000 . . . . . E-18-21
HZW9-90016-000 . . . . . E-18-10-46
HZW9-90016-000 . . . . . F-9-24
HZW9-90101-003 . . . . . F-3-12
HZW9-90102-000 . . . . . E-6-14
HZW9-90102-000 . . . . . F-2-30
HZW9-90103-010 . . . . . F-3-20-9
HZW9-90105-000 . . . . . F-2-31
HZW9-90105-000 . . . . . F-4-18
HZW9-90105-000 . . . . . F-10-28
HZW9-90154-000 . . . . . F-10-32
HZW9-90506-000 . . . . . F-8-10-27
HZX1-17110-003 . . . . . E-14-14
HZX1-32100-020 . . . . . F-7-1
HZX1-34750-023 . . . . . E-20-10-3
HZX1-50100-000 . . . . . F-10-5
HZX1-63100-R00ZA. . . . F-8-1
HZX1-87121-R00 . . . . . F-12-2
HZX1-87132-R00 . . . . . F-12-3
HZX1-90101-R00 . . . . . F-8-7
HZX2-41107-C00ZC. . . . F-3-8
HZX2-90129-000 . . . . . F-10-
HZY1-90205-000. . . . . F-3-16
HZY1-90650-003. . . . . FOP-11-5
HZY3-06177-U02 . . . . . FOP-1-1
HZY3-16011-000. . . . . E-18-10-1
HZY3-16013-000. . . . . E-18-10-2
HZY3-16024-000. . . . . E-18-10-7
HZY3-16026-000. . . . . E-18-10-8
HZY3-16041-000. . . . . E-18-10-10
HZY3-16042-000. . . . . E-18-10-11
HZY3-16061-000. . . . . E-18-10-12
HZY3-16072-000. . . . . E-18-10-13
HZY3-16073-000. . . . . E-18-10-14
HZY3-16074-000. . . . . E-18-10-15
HZY3-16075-000. . . . . E-18-10-16
HZY3-16076-000. . . . . E-18-10-17
HZY3-16077-000. . . . . E-18-10-18
HZY3-16078-000. . . . . E-18-10-19
HZY3-16082-000. . . . . E-18-10-21
HZY3-16083-000. . . . . E-18-10-22
HZY3-16087-000. . . . . E-18-10-25
HZY3-16088-000. . . . . E-18-10-26
HZY3-16721-000. . . . . E-18-10-31
HZY3-16733-000. . . . . E-18-10-35
HZY3-16752-000. . . . . E-14-8
HZY3-16752-000. . . . . E-18-10-38
HZY3-16807-003. . . . . E-18-1-4
HZY3-16818-003. . . . . E-18-1-5
HZY3-16900-003. . . . . E-18-1-11
HZY3-16901-003. . . . . E-18-1-12
HZY3-16904-003. . . . . E-18-1-13
HZY3-16911-010. . . . . E-18-10-40
HZY3-16912-003. . . . . E-18-1-14
HZY3-16913-000. . . . . E-18-10-41
HZY3-16915-010. . . . . E-18-1-16
HZY3-16918-003. . . . . E-18-1-17
HZY3-16919-003. . . . . E-18-1-18
HZY3-17748-U01 . . . . . FOP-1-2
HZY3-17749-U01 . . . . . FOP-1-3
HZY3-19270-000. . . . . F-9-11
HZY3-19271-000. . . . . F-9-12
HZY3-19272-000. . . . . F-9-13
HZY3-19300-023. . . . . E-9-10-3
HZY3-23173-010. . . . . F-9-22
HZY3-24318-000. . . . . F-4-10
HZY3-24618-000. . . . . F-2-15
HZY3-24619-000. . . . . F-2-17
HZY3-30280-003. . . . . F-11-1
HZY3-31106-003. . . . . F-11-2
HZY3-31116-000. . . . . E-5-13
HZY3-31207-003. . . . . E-21-2
HZY3-31246-003. . . . . E-21-14
HZY3-32128-000. . . . . E-15-10
HZY3-32411-003. . . . . F-7-10-3
HZY3-35470-023. . . . . F-2-22
HZY3-35645-000. . . . . F-8-20-3
HZY3-35673-003. . . . . E-3-16
HZY3-35673-003. . . . . E-4-7
HZY3-35673-003. . . . . E-9-10-12
HZY3-36122-013. . . . . F-11-5
HZY3-36123-013. . . . . F-11-6
HZY3-40119-003. . . . . F-8-10-4
HZY3-40219-013. . . . . F-11-9
HZY3-50388-U00 . . . . . FOP-7-1
HZY3-50388-U10 . . . . . FOP-7-2
HZY3-56170-013. . . . . F-11-23
HZY3-58130-T00. . . . . F-5-11
HZY3-58130-T10. . . . . F-5-
HZY3-58130-T20. . . . . F-5-
HZY3-58130-T30. . . . . F-5-
HZY3-58130-T40. . . . . F-5-
HZY3-58130-T50. . . . . F-5-
HZY3-58130-V01ZA. . . . F-5-
HZY3-58130-V11ZA. . . . F-5-
HZY3-58130-V21ZA. . . . F-5-
HZY3-58130-V31ZA. . . . F-5-
HZY3-58130-V41ZA. . . . F-5-
HZY3-58130-V51ZA. . . . F-5-
HZY3-63107-000. . . . . F-8-3
HZY3-63108-000. . . . . F-8-4
HZY3-63119-000. . . . . F-8-5
HZY3-63201-000ZC. . . . F-8-10-10
HZY3-63205-000. . . . . F-2-25
HZY3-63205-000. . . . . F-8-10-11
HZY3-63208-000. . . . . F-8-10-13
HZY3-63212-000. . . . . F-8-10-14
HZY3-63224-000. . . . . F-8-10-17
HZY3-63260-000. . . . . F-8-10-20
HZY3-90016-000. . . . . E-9-10-15
HZY3-90017-000. . . . . E-9-10-16
HZY3-90017-000. . . . . E-9-20-18
HZY3-90017-000. . . . . E-18-10-47
HZY3-90017-000. . . . . E-19-24
HZY3-90017-000. . . . . F-2-27
HZY3-90017-000. . . . . F-9-25
HZY3-90021-000. . . . . E-4-9
HZY3-90021-000. . . . . E-9-10-17
HZY3-90021-000. . . . . E-9-20-20
HZY3-90021-000. . . . . E-14-21
HZY3-90021-000. . . . . E-18-1-20
HZY3-90021-000. . . . . F-2-28
HZY3-90026-000. . . . . E-3-24
HZY3-90026-000. . . . . E-19-25
HZY3-90028-000. . . . . F-2-29
HZY3-90030-000. . . . . E-4-10
HZY3-90030-000. . . . . F-7-10-11
HZY3-90030-000. . . . . F-8-10-23
HZY3-90030-000. . . . . F-9-26
HZY3-90035-000. . . . . E-19-26
HZY3-90040-000. . . . . E-9-10-19
HZY3-90042-000. . . . . E-14-22
HZY3-90046-000. . . . . E-6-13
HZY3-90049-000. . . . . E-18-10-48
HZY3-90054-000. . . . . E-3-25
HZY3-90054-000. . . . . E-14-25
HZY3-90055-000. . . . . E-19-27
HZY3-90056-000. . . . . E-15-19
HZY3-90056-000. . . . . F-9-28
HZY3-90084-000. . . . . E-1-5
HZY3-90084-000. . . . . E-20-3
HZY3-90107-000. . . . . F-7-10-12
HZY3-90109-010. . . . . F-8-8
HZY3-90111-000. . . . . F-8-20-14
HZY3-90120-000. . . . . F-3-14
HZY3-90133-000. . . . . F-8-9
HZY3-90204-000. . . . . E-3-30
HZY3-90205-000. . . . . E-14-28
HZY3-90304-000. . . . . F-7-4
HZY3-90405-000. . . . . F-7-10-14
HZY3-90506-000. . . . . F-5-14
HZY3-90507-000. . . . . F-2-34
HZY3-90507-000. . . . . F-8-11
HZY3-90512-000. . . . . F-5-16
HZY3-90528-000. . . . . F-5-17
HZY3-90529-000. . . . . F-5-
HZY3-90530-000. . . . . F-5-
HZY3-90531-000. . . . . F-5-
HZY3-90601-030. . . . . E-4-10-8
HZY3-90601-030. . . . . F-9-29
HZY3-90602-020. . . . . E-4-10-9
HZY3-90653-003. . . . . F-7-5
HZY3-90751-000. . . . . F-2-38
HZY3-91001-003. . . . . F-2-42
HZY3-91152-003. . . . . F-2-43
HZY3-91254-003. . . . . F-4-30
HZY3-91255-003. . . . . F-2-45
HZY3-91303-000. . . . . E-21-22
HZY3-91351-003. . . . . F-5-27
HZY3-91556-000. . . . . F-8-12
HZY5-14110-000. . . . . E-9-1
HZY6-06122-010ZA. . . . E-9-20-1
HZY6-06192-000. . . . . FOP-10-1
HZY6-06193-A01 . . . . . FOP-10-1-1
HZY6-06411-000. . . . . FOP-13-1
HZY6-11100-405. . . . . E-3-1
HZY6-11321-010ZB. . . . E-6-1
HZY6-11381-010. . . . . E-6-2
HZY6-11410-425ZA. . . . E-9-10-1
HZY6-11412-000. . . . . E-9-10-2
HZY6-11911-000. . . . . E-3-5
HZY6-11912-000. . . . . E-19-1
HZY6-12000-415ZA. . . . E-3-6
HZY6-12251-003. . . . . E-9-20-6
HZY6-12310-010ZA. . . . E-1-1
HZY6-12500-000. . . . . E-1-4
HZY6-13010-000. . . . . E-7-1
HZY6-13101-000. . . . . E-7-2
HZY6-13102-000. . . . . E-7-
HZY6-13211-004. . . . . E-7-7
HZY6-13212-004. . . . . E-7-
HZY6-13213-004. . . . . E-7-
HZY6-13214-004. . . . . E-7-
HZY6-13215-004. . . . . E-7-
HZY6-13216-004. . . . . E-7-
HZY6-13217-004. . . . . E-7-
HZY6-13331-013. . . . . E-7-10
HZY6-13400-000. . . . . E-10-1
HZY6-13811-000. . . . . E-7-14
HZY6-14120-000. . . . . E-9-4
HZY6-14311-000. . . . . E-9-6
HZY6-14510-003. . . . . E-9-8
HZY6-14751-003. . . . . E-9-22
HZY6-15100-000ZA. . . . E-5-2
HZY6-15112-000. . . . . E-5-3
HZY6-15121-000. . . . . E-5-4
HZY6-15152-000. . . . . E-3-8
HZY6-15220-010. . . . . E-6-4
HZY6-15299-000. . . . . E-3-11
HZY6-15410-010ZA. . . . E-5-11
HZY6-15425-010. . . . . E-4-10-1
HZY6-15655-000. . . . . E-6-5
HZY6-15834-000. . . . . E-9-20-9
HZY6-15840-000ZA. . . . E-9-20-10
HZY6-16014-003. . . . . E-18-10-3
HZY6-16016-003. . . . . E-15-1
HZY6-16017-043. . . . . E-18-10-4
HZY6-16019-003. . . . . E-18-10-5
HZY6-16020-023. . . . . E-18-10-6
HZY6-16036-003. . . . . E-18-10-9
HZY6-16089-000. . . . . E-14-1
HZY6-16196-000. . . . . E-18-2
HZY6-16198-000. . . . . E-18-3
HZY6-16199-000. . . . . E-18-4
HZY6-16400-013. . . . . E-15-2
HZY6-16450-003. . . . . E-14-2
HZY6-16451-000. . . . . E-14-3
HZY6-16621-000. . . . . E-14-4
HZY6-16700-013. . . . . E-18-5
HZY6-16701-003. . . . . E-18-10-27
HZY6-16718-013. . . . . E-18-10-30
HZY6-16723-003. . . . . E-18-10-32
HZY6-16730-063. . . . . E-18-10-33
HZY6-16734-003. . . . . E-18-10-36
HZY6-16736-003. . . . . E-18-10-37
HZY6-16740-003. . . . . E-14-5
HZY6-16744-010. . . . . E-14-6
HZY6-16748-000. . . . . E-14-7
HZY6-16752-000. . . . . E-14-9
HZY6-16755-003. . . . . E-18-6
HZY6-16800-003. . . . . E-18-1-2
HZY6-16805-003. . . . . E-18-1-3
HZY6-16840-A00 . . . . . E-18-10-39
HZY6-16850-000. . . . . E-18-1-6
HZY6-16860-000. . . . . E-18-7
HZY6-16871-000. . . . . E-18-1-7
HZY6-16880-030. . . . . E-18-1-8
HZY6-16881-000. . . . . E-18-1-9
HZY6-16890-000. . . . . E-18-1-10
HZY6-16914-010. . . . . E-18-1-15
HZY6-17051-000ZA. . . . E-14-10
HZY6-17105-000. . . . . E-14-12
HZY6-17109-000. . . . . E-14-13
HZY6-17371-020. . . . . E-15-5
HZY6-17374-000. . . . . E-15-6
HZY6-17397-013. . . . . E-15-7
HZY6-17398-000. . . . . E-15-8
HZY6-17431-000. . . . . E-13-1
HZY6-17432-000. . . . . E-13-2
HZY6-17723-020. . . . . E-18-14
HZY6-17840-000. . . . . F-2-2
HZY6-17845-000. . . . . F-2-3
HZY6-17860-000. . . . . F-2-4
HZY6-17877-010. . . . . F-2-5
HZY6-17931-000. . . . . F-2-6
HZY6-18110-415ZA. . . . E-4-2

HZY6-18112-030ZA. . . .E-4-3
HZY6-18115-003. . . . . .E-4-4
HZY6-18130-000ZA. . . .F-9-5
HZY6-18135-003. . . . . .F-9-6
HZY6-18211-000. . . . . .F-9-7
HZY6-18212-000. . . . . .F-9-8
HZY6-19221-A00 . . . . .F-4-3
HZY6-19221-A00 . . . . .FOP-10-1-3
HZY6-19231-000. . . . . .F-4-5
HZY6-19231-000. . . . . .FOP-10-1-5
HZY6-19234-000. . . . . .F-4-6
HZY6-19234-000. . . . . .FOP-10-3
HZY6-19234-000. . . . . .FOP-10-1-6
HZY6-19251-000. . . . . .F-4-7
HZY6-19251-611. . . . . .F-4-
HZY6-19254-000. . . . . .E-6-7
HZY6-19256-000. . . . . .F-9-9
HZY6-19260-020. . . . . .E-4-10-3
HZY6-19261-010. . . . . .E-4-10-4
HZY6-19262-010. . . . . .E-4-10-5
HZY6-19263-000. . . . . .E-4-10-6
HZY6-19266-000. . . . . .E-4-10-7
HZY6-19267-010. . . . . .F-9-10
HZY6-19268-000. . . . . .E-4-5
HZY6-19269-000. . . . . .E-18-15
HZY6-19273-000. . . . . .E-18-16
HZY6-19289-000. . . . . .F-8-20-1
HZY6-19290-003. . . . . .F-9-16
HZY6-19295-000. . . . . .F-9-18
HZY6-19300-003. . . . . .E-9-10-4
HZY6-19313-000ZB. . . .E-9-10-5
HZY6-19315-010. . . . . .E-9-10-6
HZY6-19318-010. . . . . .E-9-10-7
HZY6-19319-000. . . . . .E-9-10-8
HZY6-23170-000ZA. . . .F-9-21
HZY6-23172-000. . . . . .E-6-8
HZY6-24101-000. . . . . .F-5-1
HZY6-24122-000. . . . . .F-5-4
HZY6-24123-000. . . . . .F-5-5
HZY6-24124-000. . . . . .F-5-6
HZY6-24166-000. . . . . .F-2-8
HZY6-24218-000. . . . . .F-2-9
HZY6-24310-000. . . . . .F-4-9
HZY6-24320-000. . . . . .F-2-10
HZY6-24320-610. . . . . .F-2-
HZY6-24343-000. . . . . .F-4-11
HZY6-24610-000. . . . . .F-2-12
HZY6-24612-020. . . . . .F-2-13
HZY6-24614-000. . . . . .F-2-14
HZY6-24618-000. . . . . .F-2-16
HZY6-24620-000. . . . . .F-2-18
HZY6-24628-000. . . . . .F-2-19
HZY6-24629-000ZA. . . .F-2-20
HZY6-30410-000. . . . . .E-20-10-1
HZY6-30530-003. . . . . .E-3-13
HZY6-31110-000ZA. . . .E-5-12
HZY6-31200-003. . . . . .E-21-1
HZY6-31216-003. . . . . .E-21-4
HZY6-31226-003. . . . . .E-21-7
HZY6-31231-003. . . . . .E-21-9
HZY6-31235-003. . . . . .E-21-10
HZY6-31236-003. . . . . .E-21-11
HZY6-31240-003. . . . . .E-21-12
HZY6-31242-003. . . . . .E-21-13
HZY6-31630-003. . . . . .E-19-15
HZY6-31636-010. . . . . .E-19-17
HZY6-31637-000. . . . . .E-19-18
HZY6-31638-003. . . . . .E-13-3
HZY6-31750-003. . . . . .E-19-22
HZY6-32101-000. . . . . .F-7-10-1
HZY6-32111-000. . . . . .E-14-15
HZY6-32112-000. . . . . .E-9-10-9
HZY6-32113-000. . . . . .E-9-10-10
HZY6-32114-010. . . . . .E-3-15
HZY6-32115-000. . . . . .E-15-9
HZY6-32116-000. . . . . .E-9-20-12
HZY6-32166-003. . . . . .E-18-10-42
HZY6-32370-004. . . . . .F-7-20-1
HZY6-32371-004. . . . . .F-7-20-2
HZY6-32410-020. . . . . .F-7-10-2
HZY6-32414-300. . . . . .F-7-2
HZY6-32414-300. . . . . .F-7-10-4
HZY6-32414-640. . . . . .F-7-10-5
HZY6-32418-000. . . . . .F-2-21
HZY6-32419-000. . . . . .F-7-10-6
HZY6-35475-000. . . . . .F-2-23
HZY6-35640-003. . . . . .F-8-20-2
HZY6-35660-013. . . . . .F-10-4
HZY6-35668-003. . . . . .E-4-6
HZY6-36104-003. . . . . .FOP-13-4
HZY6-36120-013. . . . . .F-11-4
HZY6-36129-013. . . . . .F-11-7
HZY6-36135-003. . . . . .E-18-17
HZY6-36550-003. . . . . .E-14-17
HZY6-36551-003. . . . . .E-14-18
HZY6-37521-000. . . . . .E-9-20-14
HZY6-38228-003. . . . . .F-7-20-3
HZY6-38235-004. . . . . .F-7-20-4
HZY6-38550-003. . . . . .F-7-10-7
HZY6-38552-000. . . . . .E-3-18
HZY6-39794-003. . . . . .F-7-20-6
HZY6-40105-020. . . . . .F-8-10-2
HZY6-40114-010. . . . . .F-8-20-4
HZY6-40116-000. . . . . .F-8-20-5
HZY6-40151-010ZD. . . .F-8-20-6
HZY6-40152-300. . . . . .F-8-20-7
HZY6-40154-000ZC. . . .F-8-10-5
HZY6-40155-000. . . . . .F-8-10-6
HZY6-40157-000. . . . . .F-8-10-7
HZY6-40201-000ZC. . . .F-3-20-1
HZY6-40201-611ZC. . . .F-3-20-
HZY6-40212-020ZC. . . .F-8-20-8
HZY6-40219-023. . . . . .F-3-20-3
HZY6-41100-040ZC. . . .F-3-10-1
HZY6-41100-614ZC. . . .F-3-10-
HZY6-41101-020ZC. . . .F-3-3
HZY6-41104-010. . . . . .F-3-6
HZY6-41105-010. . . . . .F-3-7
HZY6-41112-010. . . . . .F-4-13
HZY6-41112-611. . . . . .F-4-
HZY6-41131-000. . . . . .F-4-16
HZY6-41140-000. . . . . .F-5-7
HZY6-41151-000. . . . . .F-5-8
HZY6-41161-000. . . . . .F-5-9
HZY6-41173-000. . . . . .FOP-13-6
HZY6-41201-000ZC. . . .F-5-10
HZY6-50167-000. . . . . .F-10-7
HZY6-50168-003. . . . . .F-10-8
HZY6-50209-000. . . . . .FOP-13-7
HZY6-56000-043. . . . . .F-11-11
HZY6-56100-013. . . . . .F-11-12
HZY6-56118-000. . . . . .FOP-13-8
HZY6-60180-003. . . . . .F-8-10-8
HZY6-60185-003. . . . . .F-8-10-9
HZY6-63102-010. . . . . .F-8-2
HZY6-63144-000. . . . . .F-8-6
HZY6-63205-000. . . . . .F-8-10-12
HZY6-63212-000. . . . . .F-8-10-15
HZY6-63223-000. . . . . .F-8-10-16
HZY6-63225-000. . . . . .F-8-10-18
HZY6-63240-000. . . . . .F-8-10-19
HZY6-63711-010ZC. . . .F-8-20-9
HZY6-63716-010ZC. . . .F-8-20-10
HZY6-63718-000. . . . . .F-8-20-11
HZY6-63719-000. . . . . .F-8-20-12
HZY6-82873-000. . . . . .F-8-20-13
HZY6-87117-640. . . . . .F-12-1
HZY6-87117-U80 . . . . .F-12-
HZY6-87531-620. . . . . .F-12-8
HZY6-89216-000. . . . . .F-13-5
HZY6-90001-000. . . . . .E-3-19
HZY6-90001-000. . . . . .F-8-10-22
HZY6-90002-000. . . . . .E-6-9
HZY6-90002-000. . . . . .F-3-20-8
HZY6-90005-000. . . . . .E-3-20
HZY6-90006-000. . . . . .E-15-16
HZY6-90010-000. . . . . .E-18-19
HZY6-90011-000. . . . . .E-9-20-17
HZY6-90013-000. . . . . .E-4-8
HZY6-90014-000. . . . . .F-9-23
HZY6-90017-000. . . . . .E-6-10
HZY6-90018-000. . . . . .E-6-11
HZY6-90019-000. . . . . .E-6-12
HZY6-90020-000. . . . . .E-10-10
HZY6-90023-000. . . . . .E-9-10-18
HZY6-90043-000. . . . . .E-14-23
HZY6-90045-000. . . . . .F-9-27
HZY6-90047-000. . . . . .E-14-24
HZY6-90048-010. . . . . .E-9-20-21
HZY6-90059-000. . . . . .E-9-10-20
HZY6-90082-003. . . . . .E-3-27
HZY6-90103-000. . . . . .F-3-13
HZY6-90104-000. . . . . .F-5-12
HZY6-90105-000. . . . . .F-3-20-10
HZY6-90105-000. . . . . .F-8-10-24
HZY6-90116-000. . . . . .F-4-19
HZY6-90116-000. . . . . .FOP-10-1-8
HZY6-90118-000. . . . . .F-3-20-11
HZY6-90123-000. . . . . .F-3-15
HZY6-90135-004. . . . . .F-7-20-9
HZY6-90201-000. . . . . .E-1-6
HZY6-90301-000. . . . . .F-8-20-16
HZY6-90401-000. . . . . .E-1-7
HZY6-90601-000. . . . . .E-18-23
HZY6-90601-000. . . . . .E-18-1-21
HZY6-90602-020. . . . . .E-4-10-10
HZY6-90603-003. . . . . .E-4-10-11
HZY6-90604-003. . . . . .E-4-12
HZY6-90605-003. . . . . .E-18-25
HZY6-90606-003. . . . . .F-9-31
HZY6-90607-000. . . . . .E-18-10-50
HZY6-90651-000. . . . . .F-9-32
HZY6-90701-000. . . . . .E-10-12
HZY6-90752-000. . . . . .F-2-39
HZY6-90753-000. . . . . .F-2-40
HZY6-90755-003. . . . . .F-2-41
HZY6-91051-003. . . . . .F-5-22
HZY6-91052-003. . . . . .F-4-26
HZY6-91055-004. . . . . .F-5-23
HZY6-91251-003. . . . . .F-4-28
HZY6-91301-003. . . . . .E-4-13
HZY6-91302-003. . . . . .E-4-14
HZY6-91303-003. . . . . .E-9-20-22
HZY6-91304-010. . . . . .E-9-10-24
HZY6-91305-003. . . . . .E-3-37
HZY6-91351-003. . . . . .F-4-31
HZY6-91502-003. . . . . .E-9-33
HZY6-91552-000. . . . . .F-4-34
HZY6-91552-000. . . . . .FOP-10-1-11
HZY6-91553-000. . . . . .F-8-20-21
HZY9-15815-000. . . . . .E-9-20-8
HZY9-17315-000. . . . . .E-15-4
HZY9-30419-003. . . . . .E-20-10-2
HZY9-50381-000. . . . . .F-10-15
HZY9-56115-003. . . . . .F-11-16
HZY9-56120-003. . . . . .F-11-21
HZY9-90017-000. . . . . .E-15-18
HZZ3-06240-R30 . . . . .FOP-8-1
HZZ3-06240-R40 . . . . .FOP-8-4-1
HZZ3-06240-R60 . . . . .FOP-8-2-1
HZZ3-06323-R10 . . . . .FOP-6-1-
HZZ3-06323-R30 . . . . .FOP-6-1-1
HZZ3-06328-762. . . . . .FOP-11-1
HZZ3-19277-000. . . . . .F-9-14
HZZ3-24800-R00 . . . . .FOP-8-6-1
HZZ3-24800-R50 . . . . .FOP-8-6-
HZZ3-32186-000. . . . . .FOP-11-2
HZZ3-32346-R11 . . . . .FOP-6-1-
HZZ3-32346-R31 . . . . .FOP-6-1-3
HZZ3-35100-R11 . . . . .FOP-6-1-7
HZZ3-35100-R11 . . . . .FOP-8-6-38
HZZ3-35340-741. . . . . .FOP-12-1
HZZ3-35341-740. . . . . .FOP-12-2
HZZ3-35342-740. . . . . .FOP-12-3
HZZ3-35343-740. . . . . .FOP-12-4
HZZ3-35344-740. . . . . .FOP-12-5
HZZ3-35345-741. . . . . .FOP-12-6
HZZ3-41117-000. . . . . .F-4-15
HZZ3-87701-R00 . . . . .FOP-8-6-47
HZZ3-87703-R01 . . . . .FOP-8-2-24
HZZ3-87703-R81 . . . . .FOP-8-21
HZZ3-90129-000. . . . . .F-10-31
HZZ3-91252-003. . . . . .F-5-26
HZZ3-91253-003. . . . . .F-4-29
HZZ5-06325-600. . . . . .FOP-6-2
HZZ5-06325-700. . . . . .FOP-6-
HZZ5-06325-800. . . . . .FOP-6-
HZZ5-32185-600. . . . . .FOP-6-4
HZZ5-32185-700. . . . . .FOP-6-
HZZ5-32185-800. . . . . .FOP-6-
HZZ5-32530-000. . . . . .FOP-8-6-34
HZZ5-32545-000. . . . . .FOP-6-1-4
HZZ5-32580-600. . . . . .FOP-6-9
HZZ5-32580-700. . . . . .FOP-6-
HZZ5-32580-800. . . . . .FOP-6-
HZZ5-37210-013. . . . . .FOP-8-6-44
HZZ5-37210-712. . . . . .FOP-6-1-11
HZZ5-38414-003. . . . . .FOP-6-1-14
HZZ5-50211-000. . . . . .F-10-10

Note

Copyright © 2014 Tohatsu Corporation. All rights reserved. No part of this manual may be reproduced or transmitted in any form or by any means without the express written permission of Tohatsu Corporation.

TOHATSU

TOHATSU CORPORATION

Address : 5-4,3-chome,Azusawa,Itabashi-ku,
TOKYO,174-0051 JAPAN

Phone : TOKYO (03)3966-3117

FAX : TOKYO (03)3966-0090

Website : www.tohatsu.co.jp

2014 PARTS CATALOG

BFT 115A

002-13ZX1-0
1311EU/EX